Technical Guidelines on Minor Works Control System

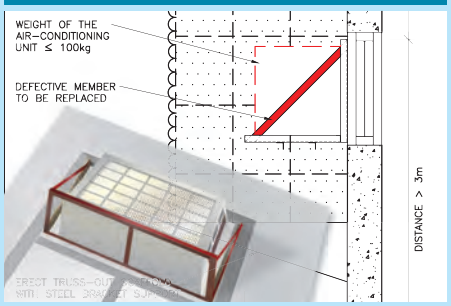

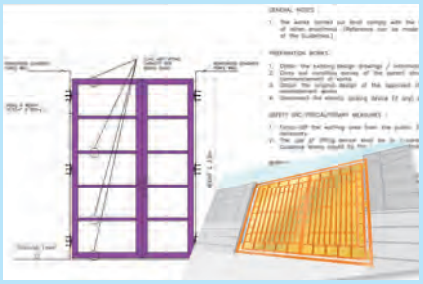

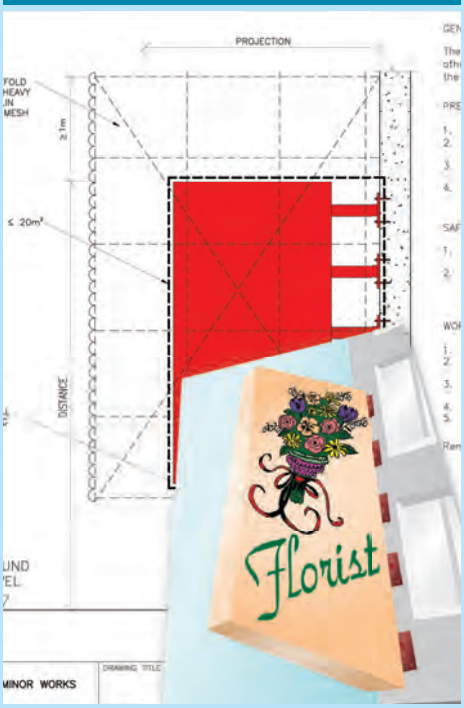

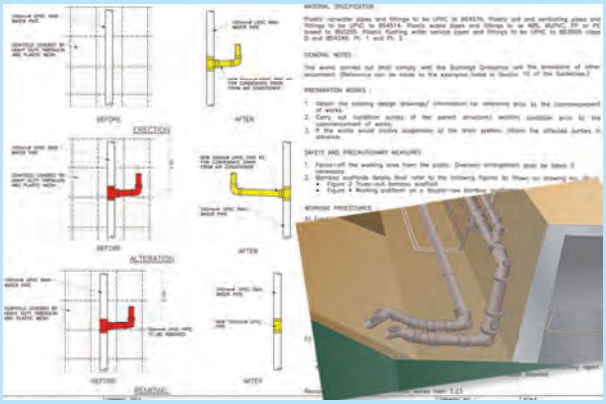

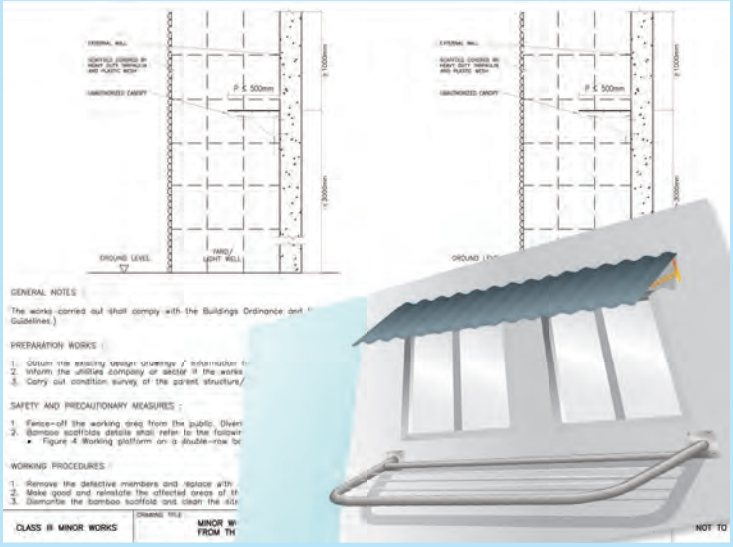

屋宇署
BUILDINGS DEPARTMENT

Preface

The "minor works control system" is a new building control system introduced in the Buildings Ordinance by the Buildings (Amendment) Ordinance 2008 and Building (Minor Works) Regulation to facilitate members of the public to carry out "minor works" lawfully through simplified procedures.

This document intends to provide the contractors and workers some practical information and technical contents on the "minor works control system" covering such areas as statutory requirements, liabilities, safety provisions and drawings of recommended design and details for Class II & Class III minor works items.

If you wish to have general information on the "minor works control system", you may refer to the "General Guidelines on Minor Works Control System" published separately.

These guidelines would assist the trade practitioners to adapt to the "minor works control system", recognize the intention of legislation, enhance their awareness of legal responsibilities and facilitate their submissions under the "simplified requirements" in the "minor works control system".

Disclaimer

- These guidelines are for reference only. Users of these guidelines should not solely rely on the information as professional advice and are recommended to seek advice from building professionals should there be doubts about the application of the Building (Minor Works) Regulation and other related issues in the carrying out of "minor works".
- Users of these guidelines are advised to verify the information by making reference to the website of Buildings Department (http://www.bd.gov.hk) before acting on it.

2010/10

TECHNICAL GUIDELINES on MINOR WORKS CONTROL SYSTEM

Contents

1 Introduction

1.1 Background 5
1.2 Objectives 5
1.3 Interpretation 6

2 Minor Works

2.1 3 Classes 8
2.2 7 Types 8
2.3 118 Items 9

3 Categorization of "Minor Works"

3.1 Building Works Associated with Service Lift, Stairlift or Lift Platform 10
3.2 Canopy 12
3.3 Drainage 14
3.4 Drying Rack 16
3.5 Excavation Works & Spread Footing Associated with "Minor Works" 17
3.6 External Rendering, External Wall Tiles, Roof Tiles or Panel Fixed by Metal Dowel 19
3.7 Fence Wall or External Mesh Fence 21
3.8 Glass Reinforced Polyester ("GRP") Water Tank 23
3.9 Internal Staircase 24
3.10 Metal Gate on Fence Wall or at the Entrance of a Building 26
3.11 Non-loadbearing External Reinforced Concrete ("RC") / Block Wall 28
3.12 Opening in Floor Slab 30
3.13 Protective Barrier (other than an External RC or Block Wall) 32
3.14 Removal of Architectural Projection, Canopy, Supporting Frame for an Air-conditioning Unit or any Associated Air Ducts, or Rack (other than a drying rack) 34
3.15 Removal of Chimney 35
3.16 Removal of Unauthorized Floor Slab or Unauthorized Structure 36
3.17 Repair of Structural Elements 39
3.18 Signboard 40
3.19 Supporting Structure / Frame for Air-conditioner & Water Cooling Tower 50
3.20 Supporting Structure for Antenna, Transceiver or Radio Base Station on Roof 53
3.21 Supporting Structure for Photovoltaic System 56
3.22 Supporting Structure for Solar Water Heating System 58
3.23 Window or Window Wall 60

2010/10

4 Statutory Procedures for Carrying Out "Minor Works"

4.1 Obtaining Prior Approval and Consent 63
4.2 Simplified Requirements
– Appointment – 63
– Notification – 65
– Submission – 65
4.3 "Simplified Requirements" in respect of Class I Minor Works 68
4.4 "Simplified Requirements" in respect of Class II Minor Works 70
4.5 "Simplified Requirements" in respect of Class III Minor Works 72

5 Exempted Building Works ("EBW") 74

6 Designated Exempted Work ("DEW")

6.1 15 Items 75
6.2 Other Areas of Concerns in Carrying Out "Designated Exempted Works" 78

7 Inspection and Certification of "Prescribed Building or Building Works" (commonly known as "Household Minor Works Validation Scheme")

7.1 The Scheme 79
7.2 Statutory Procedures for Validation and Associated Strengthening 80

8 Legal Obligations of "Prescribed Registered Contractors"

8.1 Duty to Comply with the Ordinance and Regulations 83
8.2 Duty to Supervise 83
8.3 Duty to Carry Out Class III Minor Works Personally 83
8.4 Duty to Appoint Appropriate "Technically Competent Persons" for Class I Minor Works 84
8.5 Duty on Change / Cessation of Appointment 84
8.6 Duty to Cease Works without PBP 84
8.7 Duty to Provide Information to the BA 85
8.8 Duty to Keep Record 85
8.9 Duties for Carrying Out "Minor Works" with Approval and Consent 85
8.10 Duties to Comply with the Ordinance and Supervise when Carrying Out DEW and EBW 85

2010/10

9 Sanctions of "Prescribed Registered Contractors"

9.1 Offences on Contravention of the "Simplified Requirements" 86
9.2 Offences on Failure to Notify the BA of any Contravention 86
9.3 Offences on Undertaking any Unregistered Class, Type or Item of "Minor Works" 86
9.4 Offences on Causing Injury to Person or Damage to Property 86
9.5 Offences on Employment of Illegal Immigrants 86
9.6 Offences in relation to Unregistered Construction Workers 86
9.7 Disciplinary Proceedings 87

10 Other Legislations

10.1 Allied Regulations of the Buildings Ordinance 88
10.2 New Territories Exempted Houses 88
10.3 Town Planning 88
10.4 Airport Height Restrictions 89
10.5 Fire Safety 89
10.6 Environmental Protection 89
10.7 Heritage Conservation 90
10.8 Construction Workers Registration 90
10.9 Construction Site Safety 91
10.10 Prevention of Bribery 91

11 Precautionary & Safety Measures

11.1 Record Checking 92
11.2 Precautionary and Protective Measures 93
11.3 Personal Protective Equipment 95
11.4 Fire Safety Measures 95
11.5 Electric Safety Measures 95
11.6 Gas Safety Measures 95
11.7 Other Recommended Measures or Guidance 96

12 Insurance Matters 97

13 Other Matters to Note

13.1 Common Part of a Building 98
13.2 Dedicated Areas and Public Facilities 98

14 **Frequently Asked Questions** 99

15 **Enquiries** 101

Appendix I Types of "Minor Works" 102

Appendix II Items of "Minor Works" 103

Appendix III "Prescribed Registered Contractors" to be Appointed for Carrying Out "Minor Works" 111

Appendix IV Checklist of Specified Forms & Standard Forms 112

Appendix V Sample Forms
- MW01 113
- MW02 119
- MW03 125
- MW04 ..... 125D
- MW05 ..... 125H
- MW06 ..... 125K
- MW07 ..... 125O
- MW08 ..... 125R
- MW09 ..... 125S
- MW10 ..... 125T
- MW11 ..... 125V
- MW12 ..... 125AB
- MW31 ..... 125AF
- MW32 ..... 125AG
- MW33 ..... 125AI

Appendix VI Preferred Colours for Colouring of Plans 126

Appendix VII Recommended Design and Details for Classes II & III Minor Works 127

Appendix VIII Occupational Safety and Health in "Minor Works" - Advice from the Labour Department 239

Appendix IX Recommended Steps for Contractors who Intended to Carry Out "Minor Works" ("MW") 243

2012/06 Revisions are marked in blue for ease of reference.

1 Introduction

1.1 Background

1.1.1 The Buildings Department ("BD") has carried out a comprehensive review of the Buildings Ordinance (Cap.123) with a view to rationalizing the building control regime. As a result of the review, a new building control regime, the "minor works control system" ("MWCS"), is introduced in the Buildings Ordinance by the Buildings (Amendment) Ordinance 2008 and Building (Minor Works) Regulation (Cap. 123N) to allow the public to carry out "minor works" lawfully through simplified procedures.

1.1.2 Under this new building control regime, the Buildings Ordinance ("BO or the Ordinance") provides two ways for carrying out "minor works[1]" ("MW"):

(a) the existing method – "obtain prior approval and consent" under section 14(1) of the BO; and

(b) the MWCS – "simplified requirements[2]" under section 14AA of the BO and Part 6 of the Building (Minor Works) Regulation ("B(MW)R or the Regulation").

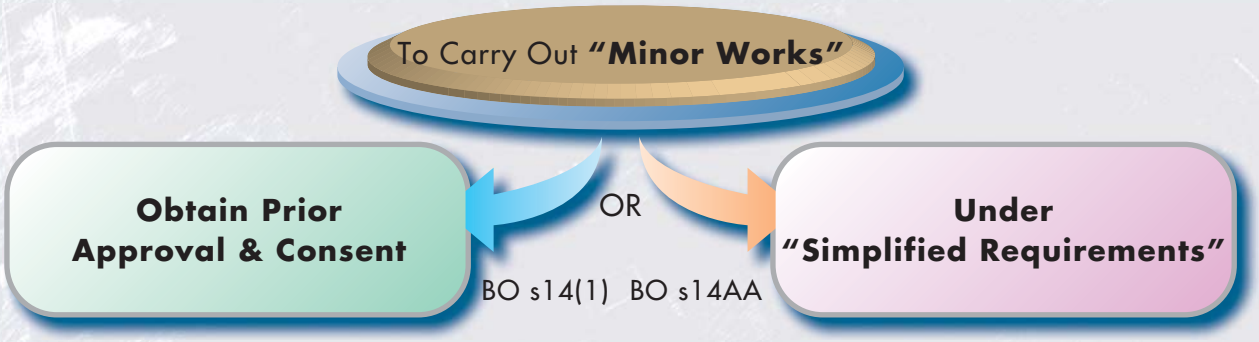

1.1.3 The MWCS was devised with an aim to improving building safety in Hong Kong and to provide members of the public an alternative procedure for carrying out "minor works" mainly in existing buildings that are of smaller scale and pose a lower level of risk, without the need to obtain approval and consent from the Building Authority ("BA") before commencement of works.

1.2 Objectives

This document intends to give the contractors who are interested in carrying out "minor works" under the "simplified requirements" a clear understanding of the new "minor works control system". Apart from identifying their legal responsibilities, technical guidance, recommended design and details, and safety instructions for complying with the associated new legislation are provided to facilitate their works in practice.

1. "Minor works" are defined in Part 3 of Schedule 1 of the B(MW)R.

2. "Simplified requirements" are the requirements prescribed in Part 6 of the B(MW)R.

1.3 Interpretation

1.3.1 Cantilevered Structure

A cantilevered structure is a beam or slab or a combination of beam and slab supported on one end only. Common examples of this type of structural elements are projecting structures located on the exterior of building like canopies, balconies, bay windows, air-conditioner hoods, architectural fins and flower racks, etc.

1.3.2 Display Area

Under the Building (Minor Works) Regulation Section 1 of Schedule 1 Part 1, "display area", in relation to a signboard, is the area of the largest planar surface of a virtual rectangular prism containing all parts of the signboard (including its supporting structure) except:

(a) if the signboard is supported by a single post of a diameter of not more than 100 mm, the post; or

(b) in any other case, any structural elements of the signboard solely for preventing the lateral movement of the signboard.

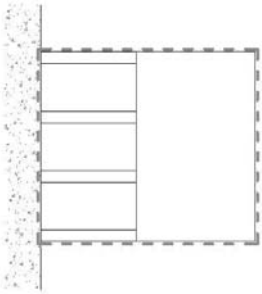

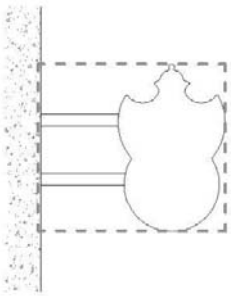

Projecting signboard contained within the prescribed prism:-

Rectangular planar area = 20m^2 (Maximum for Class I)
(Area shown dotted)

Thickness = 600mm (Maximum)

Remark: Refer to PNAP APP-126 Appendix G.

1.3.3 Original Design

Original design is the design shown on the approved plans and details or prescribed plans and details submitted under the "simplified requirements". The "prescribed building professionals" or "prescribed registered contractors" should check the building records kept by the Buildings Department to verify the original design. (This interpretation is not applicable to those building works where all the above mentioned records are not existed.)

1.3.4 Prestressed Construction

Prestressed construction is a method by pre-tensioning or post-tensioning the high-strength embedded tendons within the concrete structural element. It cannot be readily identified by visual inspection. Contractors are strongly recommended to obtain details from the approved structural plans available on the internet through the BRAVO system (http://bravo.bd.gov.hk) or at the "Building Information Centre" (13/F of Pioneer Centre, 750 Nathan Road, Kowloon) prior to the commencement of works.

1.3.5 Scheduled Areas

According to section 2 of the Buildings Ordinance, "scheduled areas" are the following areas specified in the Fifth Schedule and references to a building or building works in the "scheduled areas" are, in the case of a building or building works situated partly in one of the "scheduled areas", references to that part of the building or building works so situated:

Scheduled Area No.	Description
1	Mid-levels area
2	North-western part of the New Territories
3	The railway protection areas
4	Ma On Shan area
5	The sewage tunnel protection areas

1.3.6 Technically Competent Person ("TCP")

According to the "Technical Memorandum for Supervision Plans" issued by the Buildings Department, TCP is a person whose academic or professional qualification or experience of building works or street works satisfy the requirements set out in that Technical Memorandum for a particular type of site supervision or management tasks. There are 5 grades of TCP as defined in that Technical Memorandum.

2 Minor Works

2.1 3 Classes

2.1.1 "Minor works" are classified into three classes under the Building (Minor Works) Regulation ("B(MW)R").

2.1.2 Class I, Class II and Class III minor works have their scale, complexity and level of risk in descending order.

2.1.3 As a result, degree of control on the three classes of "minor works" are different and in descending order.

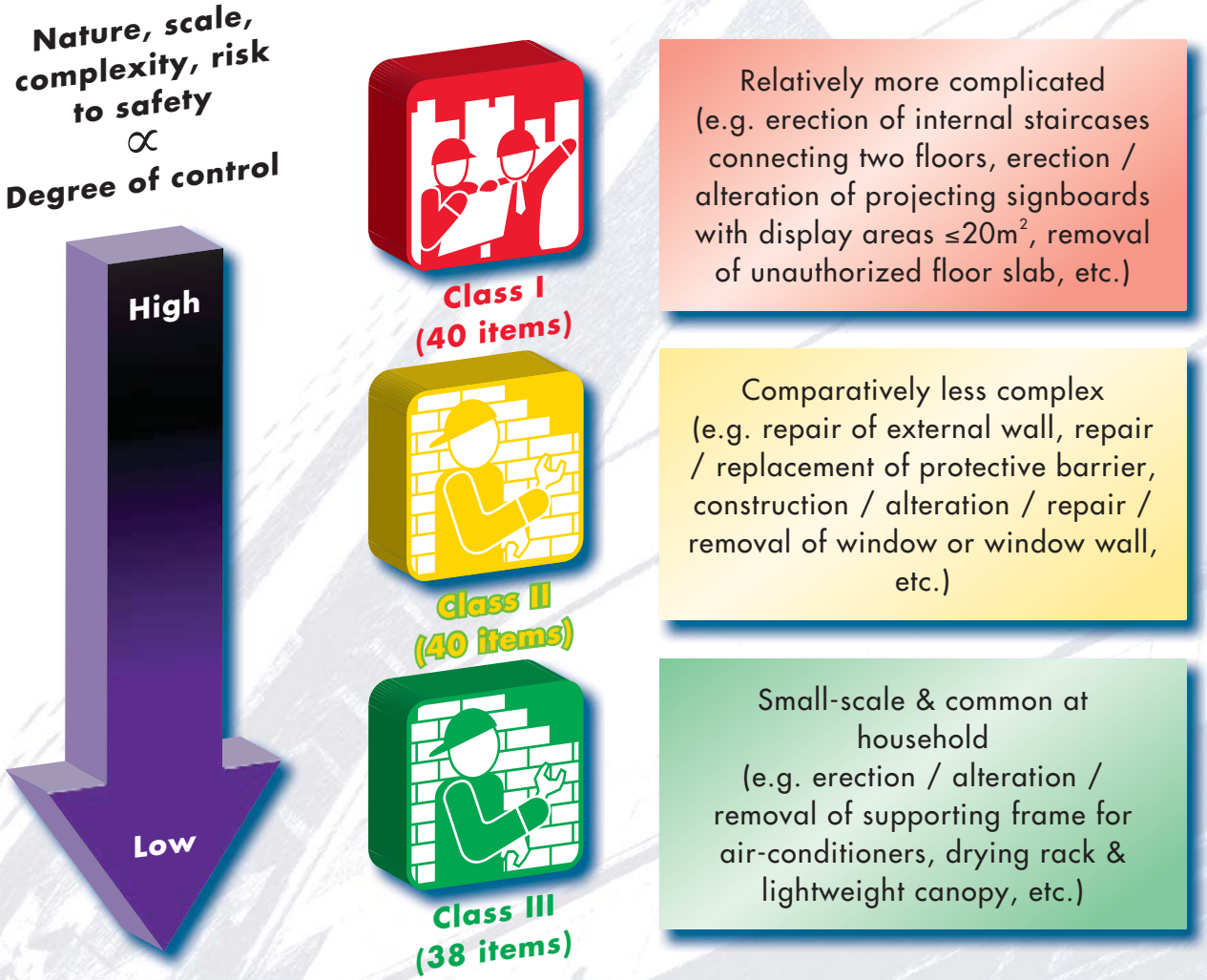

2.2 7 Types

2.2.1 Under each class of "minor works", works are further classified into 7 types that correspond to the specialization of works in the industry.

Type A

Alteration & Addition Works

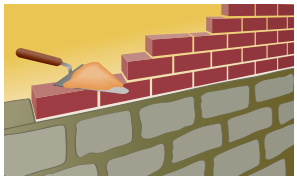

Type B

Repair Works

Type C

Works relating to Signboards

Type D

Drainage Works

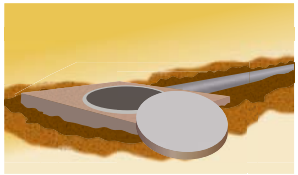

Type E

Works relating to Structures for Amenities

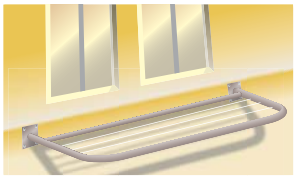

Type F

Finishes Works

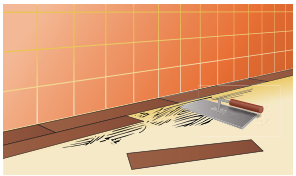

Type G

Demolition Works

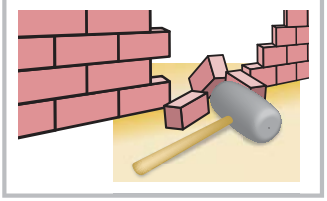

2.2.2 Part 2 of Schedule 1 of the B(MW)R lists out the 118 minor works items under each type of works. A summary is provided at Appendix I for reference.

2.3 118 Items

2.3.1 Every minor works item is specific with an unique number representing it, the first digit denotes the class. For example, item 1.1, erection or alteration of any internal staircase…, is a Class I minor works item.

2.3.2 Detailed specifications for 118 items of "minor works" can be found in Part 3 of Schedule 1 of the B(MW)R or the summary provided in Appendix II.

3 Categorization of "Minor Works"

The 118 items of "minor works" ("MW") can be categorized by the substance of works into 23 combinations. In this chapter, all categories of MW will be illustrated by photographs, with simple comparison of their descriptions[3] and other relevant considerations in the design, planning and carrying out of them. The version of codes or manuals mentioned is for reference only. Latest edition prevailing at the time of works should be followed.

3.1 Building Works Associated with Service Lift, Stairlift or Lift Platform

MW Items	1.3	1.33
Simple Comparison of Descriptions	… installation or alteration of service lift …	… removal of service lift …
	No additional load to cantilevered slab;	
	Not involve alteration of structural elements, except a simply supported beam that – (i) not of pre-stressed construction; & (ii) not used to support any column, flat slab or ribbed beam.	
	Rated load of lift ≤ 250 kg;	
	Internal floor area of lift car ≤ 1 m^2; &	
	Internal height of lift car ≤ 1.2 m.	
Other considerations	• B(C)R 9A, Lift Code & PNAP APP-29 – construction of lift well, lift pit, machine room, etc. for the service lift. • B(C)R 90 & FRC Code para. 11.1 & 11.2 – provision of fire resisting construction to the vertical shafts. • Associated slab openings may be MW item 1.2 or 2.1.	

B(C)R represents Building (Construction) Regulations; FRC Code represents Code of Practice for Fire Resisting Construction 1996; Lift Code represents Code of Practice on the Design & Construction of Buildings & Building Works for the Installation & Safe Use of Lifts and Escalators & PNAP represents Practice Notes for Authorized Person, Registered Structural Engineers & Registered Geotechnical Engineers.

3. The comparison is provided only for reference purpose. For detailed descriptions & criteria of each minor works item, Part 3 of Schedule 1 of the Building (Minor Works) Regulation ("B(MW)R") should be referred or Appendix II.

MW Items	1.4	1.34
Simple Comparison of Descriptions	… installation or alteration of stairlift or lifting platform …	… removal of stairlift or lifting platform …
	No additional load to cantilevered slab;	
	Not involve alteration of structural elements, except a simply supported beam that – (i) not of pre-stressed construction; & (ii) not used to support any column, flat slab or ribbed beam.	
Other considerations	• B(P)R 72, PNAP APP-41 & BFA Manual Div. 13 & 19 – provision of clear signs of stairlift or lifting platform for used by persons with a disability & provision of vertical transportation to persons with a disability.	
	• Stairlift / platform not located inside the required staircase; & • Existing provision under BFA Manual not contravened.	

B(P)R represents Building (Planning) Regulations; BFA Manual represents Design Manual – Barrier Free Access 2008 & PNAP represents Practice Notes for Authorized Person, Registered Structural Engineers & Registered Geotechnical Engineers.

1.4
1.34

1.4
1.34

3.2 Canopy

<table>
<tr><th>MW Items</th><th>1.27</th><th>3.25</th><th>3.37</th><th>3.38</th></tr>
<tr><td rowspan="9">Simple Comparison of Descriptions</td><td colspan="2" rowspan="2">Erection, alteration or removal …</td><td>Strengthening …</td><td>Alteration …</td></tr>
<tr><td colspan="2">unauthorized …</td></tr>
<tr><td colspan="4">projecting from external wall …</td></tr>
<tr><td>over an entrance to the building;</td><td colspan="3"></td></tr>
<tr><td colspan="4">No additional load to cantilevered slab;</td></tr>
<tr><td colspan="4">Not constructed of concrete;</td></tr>
<tr><td rowspan="2">Project > 500 mm & ≤ 2 m; &</td><td colspan="2" rowspan="2">Project ≤ 500 mm; &</td><td>Project > 500 mm & ≤ 750 mm immediately before;</td></tr>
<tr><td>Project ≤ 500 mm immediately after; &</td></tr>
<tr><td colspan="2">Highest point > 3 m from ground.</td><td colspan="2">If highest point ≤ 3 m from ground, not project over any street / common part of the building.</td></tr>
<tr><td>Other considerations</td><td colspan="4">• B(P)R 10(1) – Adequate clearance (clearance ≥ 5.5 m & ≤ 7.5 m) beneath the canopy if it is within 600 mm of the outer edge of a footpath or projecting over a road.
• B(P)R 10(2) – Adequate clearance (clearance ≥ 3.3 m & ≤ 7.5 m) beneath the canopy if it is over a footpath.
• B(P)R 10(3) – Provision of adequate surface water drainage.
• B(P)R 10(4) – Not projecting over a street by > 1/10 of its width or within 4.5 m from the centre line of street.
• B(P)R 12 – No doorway to the top of canopy.
• B(P)R 2 & 31 – Min. dimension of the unobstructed horizontal planes of the open air not affected when fixing canopies at light wells or re-entrants.
• PNAP APP-139 – Allowing for the wind channel down effect in design.
• Agreement from the IO / co-owners of the external wall / roof (if being common part) should be sought.</td></tr>
</table>

B(P)R represents Building (Planning) Regulations & PNAP represents Practice Notes for Authorized Person, Registered Structural Engineers & Registered Geotechnical Engineers.

1.27
Projection > 500 mm & ≤ 2 m
Highest point > 3 m
from ground

3.25
Projection ≤ 500 mm
Distance from
ground > 3 m

3.37
Projection ≤ 500 mm
Distance from ground > 3 m

3.38
Projection > 500 mm & ≤ 750 mm

3.3 Drainage

<table>
<tr><th>MW Items</th><th>2.30</th><th>3.23</th><th>3.24</th></tr>
<tr><td rowspan="5">Simple Comparison of Descriptions</td><td colspan="2" rowspan="2">Erection, alteration or removal of aboveground drain …</td><td>Removal of aboveground drain …</td></tr>
<tr><td>erection of which … unauthorized …</td></tr>
<tr><td colspan="2">No additional load to cantilevered slab;</td><td rowspan="3"></td></tr>
<tr><td rowspan="2">Not MW item 3.23.</td><td>Not involve main pipe, other than the replacement of components at existing junctions; &</td></tr>
<tr><td>Not involve embedded pipe, other than through a wall or slab.</td></tr>
<tr><td>Other considerations</td><td colspan="3">• B(SSFPDWL)R 11 – Proper disposal of soil.
• B(SSFPDWL)R 24 & 25 – Provision of traps in soil & waste pipes.
• B(SSFPDWL)R 28 – Control of bends in soil & waste pipes.
• B(SSFPDWL)R 29, PNAP APP-93 & PNAP ADV-14 – Provision of access for repair & maintenance.
• B(SSFPDWL)R 34 – Control of the materials for pipes.
• PNAP APP-133 – Using cast iron pipes of acceptable performance requirements / standards.
• FRC Code para. 10 – Protection of openings for the passage of pipes through fire resisting walls & floors.
• Agreement from the IO / co-owners of the external wall / roof (if being common part) should be sought.</td></tr>
</table>

B(SSFPDWL)R represents Building (Standards of Sanitary Fitments, Plumbing, Drainage Works and Latrines) Regulations; FRC Code represents Fire Resisting Construction 1996 & PNAP represents Practice Notes for Authorized Person, Registered Structural Engineers & Registered Geotechnical Engineers.

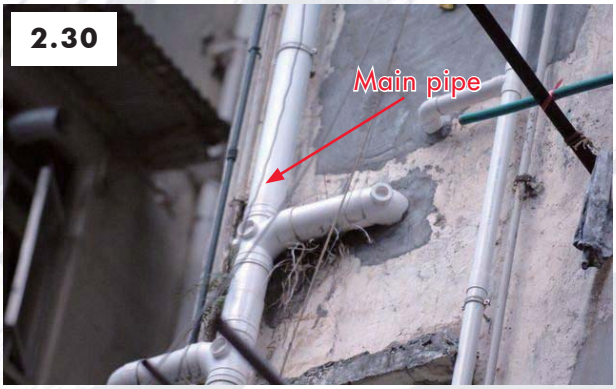

<table>
<tr><th>MW Items</th><th>1.25</th><th>1.36</th><th>2.28</th><th>2.36</th><th>2.29</th><th>1.26</th></tr>
<tr><td rowspan="10">Simple Comparison of Descriptions</td><td>Repair …</td><td>Removal …</td><td>Repair …</td><td>Removal …</td><td colspan="2">Addition or alteration …</td></tr>
<tr><td colspan="6">underground drain … involve excavation of …</td></tr>
<tr><td colspan="2">depth > 1.5 m & ≤ 3 m;</td><td colspan="3">depth ≤ 1.5 m;</td><td>depth > 1.5 m & ≤ 3 m;</td></tr>
<tr><td colspan="6">Distance between excavation & structure / building ≥ depth of excavation;</td></tr>
<tr><td colspan="6">Not involve excavation within “scheduled areas” No. 1 or 3;</td></tr>
<tr><td colspan="6">Not involve the last manhole; &</td></tr>
<tr><td colspan="6">If the works are carried out beside the …</td></tr>
<tr><td colspan="4">… crest of a slope with a gradient ≤ 30°, distance between excavation & the outer edge of crest ≥ height of slope;</td><td colspan="2" rowspan="3">… crest of a slope –
(i) gradient ≤ 15°;
(ii) height of slope ≤ 3 m; &
(iii) distance between excavation & the outer edge of crest ≥ height of slope.</td></tr>
<tr><td colspan="4">… crest of a slope with a gradient > 30° –
(i) height of slope ≤ 3 m; &
(ii) distance between excavation & the outer edge of crest ≥ 1.5 times the height of slope;</td></tr>
<tr><td colspan="4">… top of a retaining wall –
(i) height of wall ≤ 3 m; &
(ii) distance between excavation & the wall ≥ 1.5 times the height of wall.</td></tr>
<tr><td>Other considerations</td><td colspan="6">• B(SSFPDWL)R 40 & 41 – Proper disposal of foul & surface water.
• PNAP APP-103 – Not laying drainage on newly reclaimed land. Differentiation settlement for newly reclaimed land should be considered.
• Associated excavation works may be MW item 1.12 or 2.11.
• Agreement from the IO / co-owners of the common part should be sought.</td></tr>
</table>

B(SSFPDWL)R represents Building (Standards of Sanitary Fitments, Plumbing, Drainage Works and Latrines) Regulations & PNAP represents Practice Notes for Authorized Person, Registered Structural Engineers & Registered Geotechnical Engineers.

3.4 Drying Rack

<table>
<tr><th>MW Items</th><th>3.29</th><th>3.36</th><th>3.30</th></tr>
<tr><td rowspan="6">Simple Comparison of Descriptions</td><td rowspan="2">Erection, alteration or removal ...</td><td>Strengthening ...</td><td rowspan="2">Removal ...</td></tr>
<tr><td>unauthorized ...</td></tr>
<tr><td colspan="3">projecting from external wall ...</td></tr>
<tr><td colspan="2">No additional load to cantilevered slab;</td><td rowspan="3">Not DEW item 15 (see 6.1).</td></tr>
<tr><td colspan="2">Projects ≤ 750 mm; &</td></tr>
<tr><td>Highest point > 3 m from ground.</td><td>If highest point ≤ 3 m from ground, not project over any street / common part of the building.</td></tr>
<tr><td>Other considerations</td><td colspan="3">• B(P)R 7(3) – No undesirable projection over a street.
• B(P)R 30 – Natural lighting & ventilation not obstructed.
• B(P)R 35A & PNAP APP-27 – Not positioning the drying rack directly above any aperture of gas water heater.</td></tr>
</table>

B(P)R represents Building (Planning) Regulations; DEW represents designated exempted works & PNAP represents Practice Notes for Authorized Person, Registered Structural Engineers & Registered Geotechnical Engineers.

3.5 Excavation Works & Spread Footing Associated with "Minor Works"

MW Items	1.11	2.10
Simple Comparison of Descriptions	Construction or alteration of spread footing associated with the carrying out of other minor works or designated exempted works ...	
	Involve excavation of depth	
	≤ 3 m;	≤ 1.5 m;
	Overall gradient of area bounded by lines 10m away from the location of the footing in the downhill direction	
	≤ 15°;	≤ 5°;
	No slope > 15° within the area bounded by lines 10m away from the location of the footing in the downhill direction;	
	No retaining wall or terrace wall > 1.5 m, or below a line drawn down from the base of the footing that is 45° to the horizontal, within the area bounded by lines 10m away from the location of the footing in the downhill direction;	
	Allowable pressure imposed by the footing on the ground ≤ 100kPa or (if the footing is located below the ground water level) 50 kPa;	
	Footing is not founded on soft clay or mud;	
	No involve excavation within "scheduled area" No. 1 or 3; &	
	Not MW item 2.10.	
Other considerations	• B(C)R Part XII, Concrete Code & PNAP APP-142 – Design of concrete. • Foundations Code s.4 & s.7.1.3 – General design requirements of shallow foundations & sampling & testing requirements of concrete & reinforcement. • PNAP ADV-15 & PNRC 41 – Control of the fixing of reinforcement. • Associated excavation works may be MW item 1.12 or 2.11.	

B(C)R represents Building (Construction) Regulations; Concrete Code represents Code of Practice for Structural Use of Concrete 2004; Foundations Code represents Code of Practice for Foundations & PNAP represents Practice Notes for Authorized Person, Registered Structural Engineers & Registered Geotechnical Engineers.

MW Items	1.12	2.11
Simple Comparison of Descriptions	Excavation works associated with the carrying out of any other minor works or designated exempted works …	
	No excavation within "scheduled area" No. 1 or 3; &	
	Depth of excavation:	
	> 1.5 m & ≤ 3 m.	> 0.3 m & ≤ 1.5 m.
Other considerations	• PNAP APP-48 & Supervision Code – Provision of qualified supervision (PNAP APP-28 for supervision in the "scheduled areas"). • Construction Site (Safety) Regulations 41 – Safe guarding the edges of excavation. • No additional floor area will be resulted after the excavation work. • The MOE, MOA & EVA not affected.	

PNAP represents Practice Notes for Authorized Person, Registered Structural Engineers & Registered Geotechnical Engineers; Supervision Code represents Code of Practice for Site Supervision 2005; MOE represents means of escape in case of fire; MOA represents means of access for fire fighting and rescue & EVA represents emergency vehicular access.

3.6 External Rendering, External Wall Tiles, Roof Tiles or Panel Fixed by Metal Dowels

MW Items	1.31	2.33
Simple Comparison of Descriptions	Erection, repair or removal of panel fixed by metal dowels & fixings onto a wall inside a building ...	
	Highest point of the panel from adjoining floor	
	> 10 m.	> 3 m & ≤ 10 m.
Other considerations	Fire resistance of the wall not affected.	

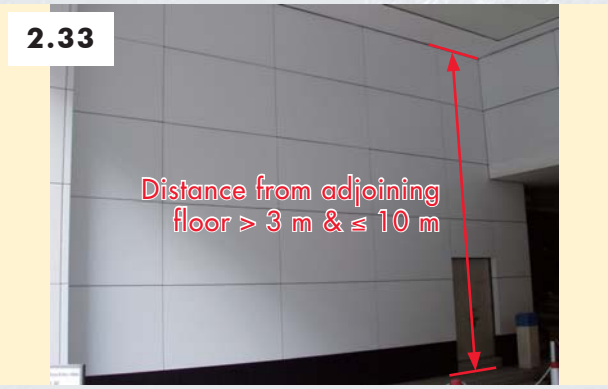

MW Items	2.34	3.31
Simple Comparison of Descriptions	Laying, repair or removal of external rendering, external wall tile or roof tile …	Erection, repair or removal of any cladding fixed to the external wall … any part of the cladding ≤ 6m from the adjoining ground or adjoining floor.
	For repair of any external rendering, highest point of the area to be repaired > 3m from the adjoining ground or adjoining floor;	
	Other than the repair of external rendering, highest point of the rendering or tile > 3m from the adjoining ground or adjoining floor; &	
	For roof tile, gradient of roof > 1 in 4.	
Other considerations	• PNAP APP-102 para. 5 & Guidelines for the Removal of Typical Unauthorized Building Works & General Maintenance of External Walls s.5 – General safety requirements. • Agreement from the IO / co-owners of the external wall / roof (if being common part).	
	• B(C)R 48 – Making the roof weatherproof. • PNAP ADV-31 / PNRC 67 – Proper design & specification for external rendering / tiling works.	• B(C)R 39 & PNAP APP-16 – Proper specification of material, fixings, strength & durability for cladding.

B(C)R represents Building (Construction) Regulations; PNAP represents Practice Notes for Authorized Person, Registered Structural Engineers & Registered Geotechnical Engineers & PNRC represents Practice Notes for Registered Contractors.

3.7 Fence Wall or External Mesh Fence

MW Items	1.7	2.6	1.8	2.7
Simple Comparison of Descriptions	Erection or alteration …			
	… solid fence wall …		… external mesh fence …	
	Erected on-grade; &			
	Height > 1.5 m & ≤ 5 m.	Height ≤ 1.5 m.	Height > 3 m & ≤ 10 m.	Height ≤ 3 m.
Other considerations	• B(P)R 30 – No obstruction to the natural lighting & ventilation • PNAP APP-103 – Not construct fence wall on newly reclaimed land. • PNAP ADV-22 – Control of the felling or transplanting of trees. • Associated excavation works & footing may be MW item 1.12 or 2.11 & 1.11 or 2.10. • The MOE, MOA & EVA not affected.			

B(P)R represents Building (Planning) Regulations; EVA represents emergency vehicular access; MOA represents means of access for fire fighting and rescue; MOE represents means of escape in case of fire & PNAP represents Practice Notes for Authorized Person, Registered Structural Engineers & Registered Geotechnical Engineers.

MW Items	1.9	3.4	1.10	3.5
Simple Comparison of Descriptions	Removal …			
	… solid fence wall …		… external mesh fence …	
	Erected on-grade; &			
	Height > 3 m.	Height > 1.1 m & ≤ 3 m.	Height > 5 m.	Height > 3 m & ≤ 5 m.
Other considerations	Code of Practice for Demolition of Buildings 2004 – Provision of precautionary measures.			

3.8 Glass Reinforced Polyester ("GRP") Water Tank

MW Items	2.3	2.4
Simple Comparison of Descriptions	Replacement … GRP water tank on roof …	Removal … GRP water tank on roof …
	in accordance with the original design …	
	Water head of tank ≤ 2m;	
	Capacity of tank ≤ 9 m^3; &	
	Distance from the edge of roof ≤ 1.5 m.	
Other considerations	Practice Notes for Authorized Person, Registered Structural Engineers & Registered Geotechnical Engineers APP-100 – Structural design of the tank & the fixing arrangement.	

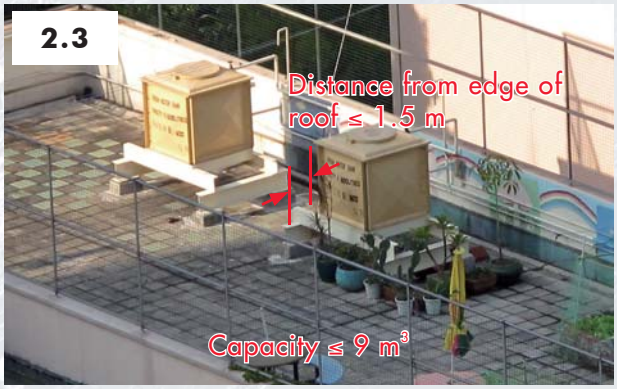

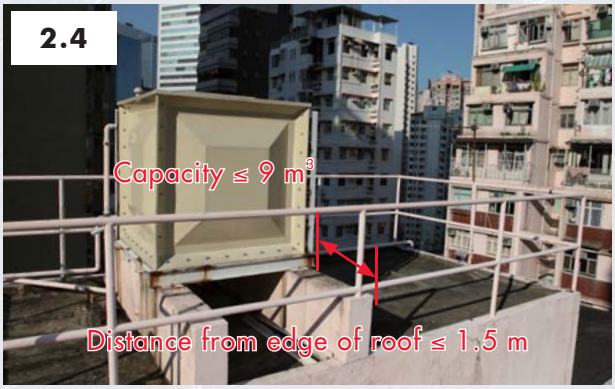

3.9 Internal Staircase

MW Items	1.1	1.32	3.1
Simple Comparison of Descriptions	Erection or alteration …	Removal …	Removal of the whole …
			on the lowest storey …
	internal staircase … not used as a MOE or MOA …		
	Not involve alteration of structural elements, except a simply supported beam that – (i) not of pre-stressed construction; & (ii) not used to support any column, flat slab or ribbed beam; &		
	No additional load to cantilevered slab.	Not MW item 3.1.	Height of staircase ≤ 1.5 m.
Other considerations	• B(C)R 8 – Provision of protective barrier if level difference > 600 mm is resulted after completion of works.		
	• B(C)R Part XII – Design of concrete. • B(C)R 90 & FRC Code para. 5, 6 & 10.2 – Compartment volume & fire resisting construction. • B(P)R 72, PNAP APP-41 & BFA Manual Div. 7 & 8 – Persons with a disability to travel. • FRC Code para. 12 – Smoke barrier. • Associated formation of slab opening may be MW items 1.2 or 2.1.	• Demolition Code – Necessary provision of precautionary measures. • Not the access for maintenance to roof, flat roof or canopy, etc.	

B(C)R represents Building (Construction) Regulations; B(P)R represents Building (Planning) Regulations; BFA Manual represents Design Manual – Barrier Free Access 2008; Demolition Code represents Code of Practice for Demolition of Buildings 2004, FRC Code represent Code of Practice for Fire Resisting Construction 1996; MOA represents means of access for firefighting & rescue & MOE represents means of escape in case of fire.

1.1
Internal staircase is not MOE or MOA

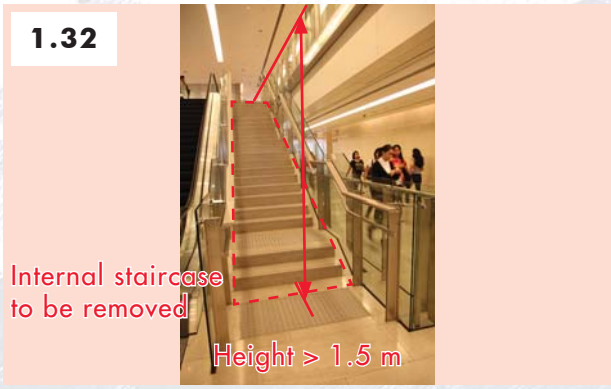
1.32
Internal staircase
to be removed
Height > 1.5 m

3.1
Height ≤ 1.5 m

3.10 Metal Gate on Fence Wall or at the Entrance of a Building

MW Items	1.16	2.16	3.13
Simple Comparison of Descriptions	Erection, alteration or repair…		Erection, alteration, repair or removal…
	at a fence wall or at an entrance to a building …		
	No additional load to cantilevered slab;		
	Not involve alteration of other structural elements;		
	Height of gate ≤ 3.2 m; &		
	Weight of at least one leaf > 300 kg.	Weight of at least one leaf > 200 kg; &	
		Weight of each leaf ≤ 300kg;	Weight of each leaf ≤ 200 kg.
			Not DEW item 8 (see 6.1).
Other considerations	• B(P)R 15 – Not to open the gate over streets. • MOE Code para. 8.2, Table 2 & para. 16.4 – Provision of locking devices that can be readily open from inside without the use of key & control of the min. width of metal gate if the metal gate is fixed at the entrance of building as well as the exit of any required staircase. • PNAP APP-146 & PNRC 68 – Design & installation standards of metal gate. • The MOE, MOA & EVA not affected. • Shutter Code issued by the Electrical & Mechanical Services Department should be complied with if the metal gates are electrically operated. • A Safety Guide on Gate Work issued by the Labour Department – Safety tips & key points to note on gate-related work.		

B(P)R represents Building (Planning) Regulations; EVA represents emergency vehicular access; MOA represents means of access for access for firefighting & rescue; MOE represents means of escape in case of fire; MOE Code represents Code of Practice for the Provision of Means of Escape in Case of Fire 1996; PNAP represents Practice Notes for Authorized Person, Registered Structural Engineers & Registered Geotechnical Engineers; PNRC represents Practice Notes for Registered Contractors & Shutter Code represents Code of Practice for Installation of Electrically Operated Sliding Gates, Sliding Glass Doors & Rolling Shutters.

MW Items	1.40	2.40	3.33
Simple Comparison of Descriptions	Removal …		
	at a fence wall or at an entrance to a building …		
	No additional load to cantilevered slab;		
	Not involve alteration of other structural elements;		
	Height of the gate ≤ 3.2 m; &		
	Weight of at least one leaf > 300 kg.	Weight of at least one leaf > 200 kg; &	
		Weight of each leaf ≤ 300 kg;	Weight of each leaf ≤ 200 kg.
			Not DEW item 8 (see 6.1).
Other considerations	Code of Practice for Demolition of Buildings 2004 – Necessary provision of precautionary measures.		

DEW represents designated exempted works.

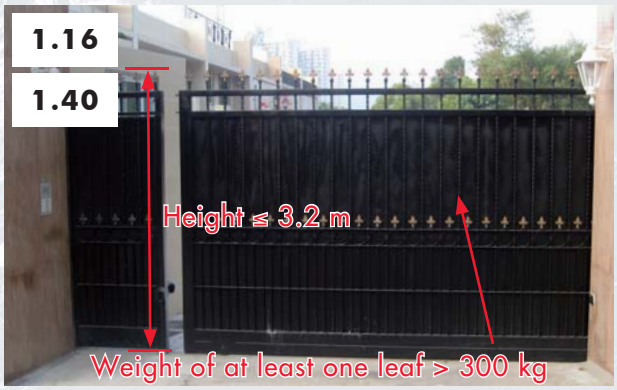

3.11 Non-loadbearing External Reinforced Concrete ("RC") / Block Wall

MW Items	1.15	2.13	2.15
Simple Comparison of Descriptions	Erection, alteration or removal …		Repair …
	external RC wall (other than a load bearing wall) of a building …		
	No additional load to cantilevered slab;		
	Not involve alteration of other structural elements; &		
	Height of wall		
	> 1.1m & ≤ 3.5 m.	≤ 1.1 m.	≤ 3.5 m.
Other considerations	• B(C)R 41 – Protection against penetration of moisture. • B(C)R Part XII – Design of concrete. • PNAP APP-24 para. 10 & PNRC 14 para. 9 – Not having any opening within 5m of the MTR vent shaft. • PNAP APP-86 – Design & construction of non-loadbearing wall. • PNAP ADV-15 & PNRC 41 – Control of fixing of reinforcement. • B(DW)R 10 – Not to overload the floor. • B(DW)R 11 – Provision of precautionary measures from sudden collapse on cutting the steelwork. • B(P)R 3A & PNAP APP-110 – Provision of protective barrier to opening on external wall. • Demolition Code – Necessary provision of precautionary measures for removal. • FRC Code para. 7, 12.3, 11.7, 11.8, etc. – Fire resisting wall / spandrel. • Existing provision for the building under JPN 1 & 2 not contravened if green features are provided. • Agreement from the IO / co-owners of the external wall (if being common part) should be sought.		

B(C)R represents Building (Construction) Regulations; B(DW)R represents Building (Demolition Works) Regulations; B(P)R represents Building (Planning) Regulations; Demolition Code represents Code of Practice for Demolition of Buildings 2004; FRC Code represent Code of Practice for Fire Resisting Construction 1996; JPN represents Joint Practice Notes; PNAP represents Practice Notes for Authorized Person, Registered Structural Engineers & Registered Geotechnical Engineers & PNRC represents Practice Notes for Registered Contractors.

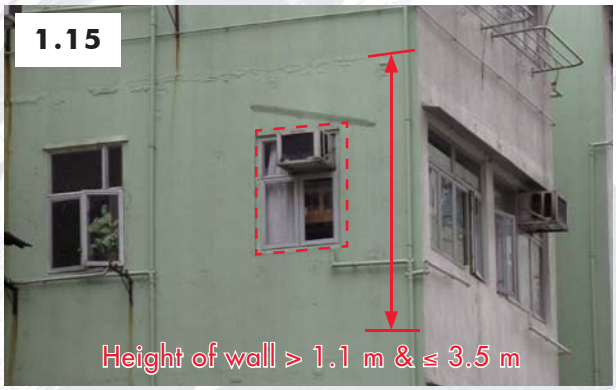

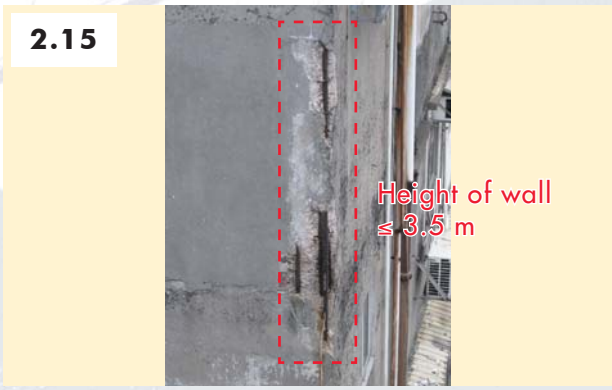

MW Items	2.14	3.11	3.12
Simple Comparison of Descriptions	Erection, alteration or removal ...		Repair ...
	external block wall (other than a load bearing wall) of a building ...		
	No additional load to cantilevered slab;		
	Not involve alteration of any other structural elements; &		
	Height of wall		
	> 1.1 m & ≤ 3.5 m.	≤ 1.1 m.	≤ 3.5 m.
Other considerations	• B(C)R 41 – Protection against penetration of moisture. • PNAP APP-24 para. 10 & PNRC 14 para. 9 – Not having any opening within 5m of the MTR vent shaft. • PNAP APP-86 – Design & construction of non-loadbearing wall. • B(DW)R 10 – Not to overload the floor. • B(P)R 3A & PNAP APP-110 – Provision of protective barrier to opening on external wall. • FRC Code para. 12.3 – Provision of spandrel, if applicable. • Existing provision for the building under JPN 1 & 2, if applicable, not contravened. • Demolition Code – Necessary provision of precautionary measures. Precautionary measures are required before the formation of opening in a block wall to avoid the collapse of block wall above the opening. Provision of lintel for the new opening is also required.		

B(C)R represents Building (Construction) Regulations; B(DW)R represents Building (Demolition Works) Regulations; B(P)R represents Building (Planning) Regulations; Demolition Code represents Code of Practice for Demolition of Buildings 2004; FRC Code represent Code of Practice for Fire Resisting Construction 1996; JPN represents Joint Practice Notes & PNAP represents Practice Notes for Authorized Person, Registered Structural Engineers & Registered Geotechnical Engineers.

3.12 Opening in Floor Slab

MW Items	1.2	2.1
Simple Comparison of Descriptions	Formation of opening in a slab ...	
	No additional load to cantilevered slab;	
	Not involve alteration of structural elements, except a simply supported beam that – (i) not of pre-stressed construction; & (ii) not used to support any column, flat slab or ribbed beam.	
	Area of opening > 1 m^2 & 4.5 m^2.	Area of opening ≤ 1 m^2; &
		Not DEW item 1 (see 6.1).
Other considerations	• B(DW)R 10 – Not overload the floor. • B(DW)R 11 – Provision of precautionary measures from sudden collapse on cutting the steelwork. • B(C)R 90 & FRC Code para. 5, 6 & 10.2 – Control of compartment volume & fire resisting construction. • FRC Code para. 12 – Provision of a 450 mm smoke barrier to surround the opening at the underside of the floor. • Usage of the slab opening e.g. for passage of building service, drainage, lift, staircase etc be clearly indicated on plan; • B(C)R 8 & B(P)R 3A – Level difference resulted after completion of works. • For forming openings to combine two adjoining residential units, JPN 1 & 2 should not be contravened if there are green features provided to the units.	

B(C)R represents Building (Construction) Regulations; B(DW)R represents Building (Demolition Works) Regulations; B(P)R represents Building (Planning) Regulations; DEW represents designated exempted works; FRC Code represent Code of Practice for Fire Resisting Construction 1996; JPN represents Joint Practice Notes & PNAP represents Practice Notes for Authorized Person, Registered Structural Engineers & Registered Geotechnical Engineers.

MW Items	1.35	2.35
Simple Comparison of Descriptions	Reinstatement …	
	in accordance with the original design …	
	No additional load to cantilevered slab;	
	Not involve alteration of other structural elements; &	
	Area of opening > 1 m^2 & 4.5 m^2.	
		Distance between the 2 farthest points within the area of opening > 150 mm.
Other considerations	• B(C)R Part XII, Concrete Code & PNAP APP-142 – Design of concrete. • PNAP ADV-15 & PNRC 41 – Control of fixing of reinforcement.	

B(C)R represents Building (Construction) Regulations; Concrete Code represents Code of Practice for Structural Use of Concrete 2004; PNAP represents Practice Notes for Authorized Person, Registered Structural Engineers & Registered Geotechnical Engineers & PNRC represents Practice Notes for Registered Contractors.

3.13 Protective Barrier (other than an External RC or Block Wall)

MW Items	1.6	2.5	3.3
Simple Comparison of Descriptions	Alteration or removal …	Repair or replacement …	
	protective barrier (other than an external RC wall or block wall) …		
		in accordance with the original design …	
	Not result in any additional load to any cantilevered slab; &		
		Level on which the protective barrier is located	
		> 2 m	≤ 2 m
		from its adjacent level.	
	If the lowest frame of the existing window or window wall ≤ 1.1 m from its adjoining structural floor level, part of the window or window wall forms part of the existing protective barrier.		
	Modification of the design, layout, materials used, etc. for these kinds of existing window or window wall are alteration of protective barrier under minor works item 1.6. Repair or replacement of them in accordance with the original design is minor works item 2.5 or 3.3.		
Other considerations	• B(C)R 8 & PNAP APP-110 – Layout of protective barrier to the staircase & associated opening. • B(C)R 17 – Design of min. horizontal imposed loads on protective barrier. • B(P)R 3A & PNAP APP-110 – Layout of protective barrier to opening on external wall. • PNAP APP-37 – Curtain wall, window & window wall systems, in particular the guidelines on design, standards & installation of window system, quality & heat soak process of tempered glass, and submission of compliance certificate of test report. • FS Code clause C11.1 - Fire resisting spandrel. • Existing provision for the building under JPN 1 & 2, if applicable, not contravened.		

B(C)R represents Building (Construction) Regulations; B(P)R represents Building (Planning) Regulations; FS Code represents Code of Practice for Fire Safety in Buildings 2011; JPN represents Joint Practice Notes; & PNAP represents Practice Notes for Authorized Persons, Registered Structural Engineers & Registered Geotechnical Engineers.

2012/06 Revisions are marked in blue for ease of reference.

2012/06 Revisions are marked in blue for ease of reference.

3.14 Removal of Architectural Projection, Canopy, Supporting Frame for an Air-conditioning Unit or any Associated Air Ducts, or Rack (other than a drying rack)

MW Items	2.31	3.26
Simple Comparison of Descriptions	Removal … projecting from external wall of a building …	
	Projects > 750 mm;	Projects ≤ 750 mm;
	Not constructed of concrete; &	
	Not DEW item 13 or 14 (see 6.1).	
Other considerations	Building (Demolition Works) Regulations 5 – Not having the electric cables or the apparatus remained electrically charge, if applicable.	

DEW represents designated exempted works.

3.15 Removal of Chimney

MW Items	1.37	2.37
Simple Comparison of Descriptions	Removal … attached to external wall … or on the roof of a building …	
	Highest point ≤ 10m from the level of adjoining roof; &	Highest point ≤ 5m from the level of adjoining roof; &
	Not MW item 2.37	Smallest cross-sectional dimension ≤ 500 mm.
Other considerations	Building (Demolition Works) Regulations 3 – Provision of precautionary measures.	

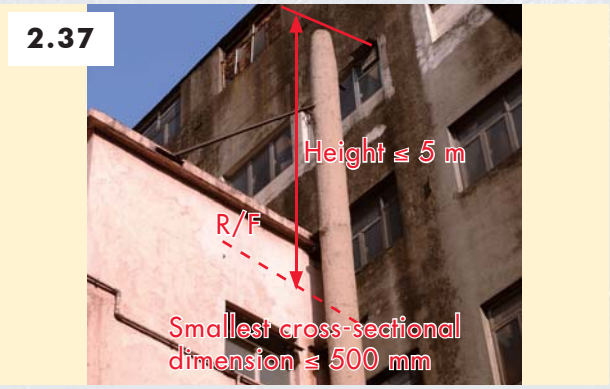

3.16 Removal of Unauthorized Floor Slab or Unauthorized Structure

MW Items	1.30	2.32
Simple Comparison of Descriptions	Removal … unauthorized structure (other than an architectural projection, canopy, frame or rack) …	
	projecting > 2 m from the external wall; &	projecting ≤ 2 m from the external wall; &
	If the structure is fixed to a balcony or canopy that is a cantilevered slab, the span of balcony or canopy > 1 m.	If the structure is fixed to a balcony or canopy that is a cantilevered slab, the span of balcony or canopy ≤ 1 m.
Other considerations	• B(DW)R 10 – Not to overload the floor. • B(DW)R 11 – Provision of precautionary measures from sudden collapse on cutting the steelwork. • PNAP APP-21 – Provision of measures for public safety when carrying out demolition works. • Other legislations affecting the associated provision of protective barrier / external wall should be complied with. • Guidelines for the Removal of Typical Unauthorized Building Works & General Maintenance of External Walls s.4 – General safety requirements.	

B(DW)R represents Building (Demolition Works) Regulations & PNAP represents Practice Notes for Authorized Person, Registered Structural Engineers & Registered Geotechnical Engineers.

MW Items	1.38	2.39	3.32
Simple Comparison of Descriptions	Removal … unauthorized structure	Removal … unauthorized single storey structure	
	located on-grade or on a slab (other than a cantilevered slab);		
	No alteration of structural elements;		
	Height of structure		
	> 5 m & ≤ 10 m;	≤ 5 m;	≤ 2.5 m;
	Not a flat slab, pre-stressed concrete construction, transfer girder, hanger, cantilevered structure with a span > 1.2 m or earth retaining structure;		
	Span of structural element of the structure		
	≤ 6 m; &		≤ 4.5 m;
	Structure ≤ 2 storeys.	Not MW item 3.32.	Roofed over area ≤ 20 m^2; &
			If on roof, any part of the structure > 1.5 m from the edge of roof.
Other considerations	• B(DW)R 10 – Not to overload the floor. • B(DW)R 11 – Provision of precautionary measures from sudden collapse on cutting the steelwork. • PNAP APP-21 – Provision of measures for public safety when carrying out demolition works. • Other legislations affecting the associated provision of protective barrier / external wall should be complied with. • Guidelines for the Removal of Typical Unauthorized Building Works & General Maintenance of External Walls s.4 – General safety requirements.		

B(DW)R represents Building (Demolition Works) Regulations & PNAP represents Practice Notes for Authorized Person, Registered Structural Engineers & Registered Geotechnical Engineers.

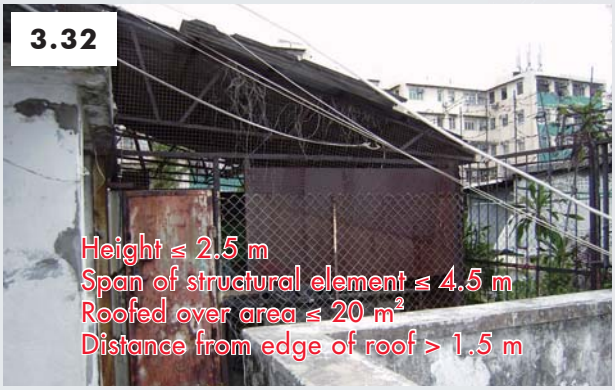

MW Items	1.39	2.38
Simple Comparison of Descriptions	Removal … unauthorized floor slab.	Removal … unauthorized structure hung underneath the soffit of a balcony or canopy (other than a cantilevered slab) or fixed to a balcony or canopy (other than a cantilevered slab).
Other considerations	• B(DW)R 10 – Not to overload the floor. • B(DW)R 11 – Provision of precautionary measures from sudden collapse on cutting the steelwork. • PNAP APP-21 – Provision of measures for public safety when carrying out demolition works. • Other legislations affecting the associated provision of protective barrier / external wall should be complied with. • Guidelines for the Removal of Typical Unauthorized Building Works & General Maintenance of External Walls s.4 – General safety requirements.	

B(DW)R represents Building (Demolition Works) Regulations & PNAP represents Practice Notes for Authorized Person, Registered Structural Engineers & Registered Geotechnical Engineers.

3.17 Repair of Structural Elements

MW Items	1.17	2.17
Simple Comparison of Descriptions	Repair … structural elements (including any column, shear wall, flat slab, cantilevered slab, ribbed slab, waffle slab, pre-stressed beam, post-tensioned beam, cantilevered beam, transfer plate, transfer beam or earth retaining structure) …	Repair … slab or beam (other than a flat slab, cantilevered slab, ribbed slab, waffle slab, pre-stressed beam, post-tensioned beam, cantilevered beam, transfer plate or transfer beam) …
	in accordance with the original design … not result in any additional load to any cantilevered slab.	
Other considerations	• B(C)R Part XII – Design of concrete. • B(DW)R 11 – Provision of precautionary measures from sudden collapse on cutting the steelwork. • PNAP ADV-15 & PNRC 41 – Control of the fixing of reinforcement. • PNAP APP-102 para. 5 & Guidelines for the Removal of Typical Unauthorized Building Works & General Maintenance of External Walls s.5 – General safety requirements.	

B(C)R represents Building (Construction) Regulations; B(DW)R represents Building (Demolition Works) Regulations & PNAP represents Practice Notes for Authorized Person, Registered Structural Engineers & Registered Geotechnical Engineers.

3.18 Signboard

MW Items	1.20	2.18	3.16
Simple Comparison of Descriptions	Erection or alteration … projecting signboard …		Erection, alteration or removal … projecting signboard (including replacement of display surface …)
	Not consist of stone;		
	No additional load to cantilevered slab;		
	Not involve alteration of structural elements;		
	Display area > 10 m^2 & ≤ 20 m^2;	Display area ≤ 10 m^2;	Display area ≤ 1 m^2;
	Projects ≤ 4.2 m; &		Projects ≤ 1 m;
	Thickness ≤ 600 mm.		Thickness ≤ 300 mm; &
		Not MW item 3.16.	Any part of signboard ≤ 6 m from ground.
Other considerations	• BO s31(1)(aa) & PNAP APP-126 Appendix G – Control of the projections of signboard on or over streets. • PNAP APP-126 Appendices C-F, H & I – Design & construction requirements of signboard given by the BA, FSD, TD & HyD, etc. • B(P)R 30 – Natural lighting & ventilation, prescribed plane for prescribed window for adjacent building on the same site, if any, not obstructed. • PNAP APP-24 Appendix A s.C.1 & PNRC 14 – No signboard projected within 6 m of the MTR tracks. • Agreement from the IO / co-owners of the external wall / roof (if being common part) should be sought.		
	Harbour Planning Guidelines for Victoria Harbour and its Harbour-front Areas issued by the Harbourt-front Enhancement Committee – Harbour planning principles.		In case of signboard projecting ≤ 600 mm over a footpath, any part of the signboard should have a clearance ≥ 2.5 m from ground.

B(P)R represents Building (Planning) Regulations; BA represents Building Authority; BO represents Buildings Ordinance; FSD represents Fire Services Department; HyD represents Highways Department; PNAP represents Practice Notes for Authorized Person, Registered Structural Engineers & Registered Geotechnical Engineers; PNRC represents Practice Notes for Registered Contractors & TD represents Transport Department.

1.20

2.18

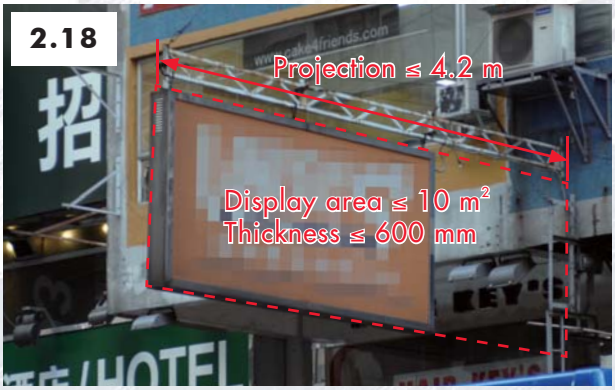

3.16

Not Minor Works

MW Items	1.21	2.20	2.22
Simple Comparison of Descriptions	Erection or alteration … signboard on roof …	Erection or alteration … signboard on or hung underneath the soffit of a balcony or canopy (other than a cantilevered slab) …	Erection or alteration of any outdoor signboard together with a spread footing …
	Not consist of stone;		
	Display area ≤ 20 m^2;	Display area ≤ 2 m^2;	Display area ≤ 1 m^2;
	No part projects beyond the external wall of the building;	No part projects beyond the balcony or canopy;	
	Thickness ≤ 600 mm;	Thickness ≤ 100 mm; &	Thickness ≤ 300 mm
	Any part of signboard ≤ 6 m from the level of roof;		Any part of signboard ≤ 3 m from ground;
	No additional load to cantilevered slab; & Not involve alteration of structural elements	Height of signboard ≤ 600 mm	Involve depth of excavation ≤ 500 mm for construction of the footing; & Not involve excavation within "scheduled areas" no. 1 or 3.
Other considerations	• PNAP APP-126 Appendices C-F, H & I – Design & construction requirements of signboard given by the BA, FSD, TD & HyD, etc. • Agreement from the IO / co-owners of the external wall / roof / the ground (if being common part) should be sought.		
	B(P)R 30 – Natural lighting & ventilation not obstructed.		Associated excavation works & footing may be MW item 1.12 or 2.11 & 1.11 or 2.10.
	• Hong Kong Airport (Control of Obstructions) Ordinance & PNAP APP-32 – Not exceeding the airport height restrictions. • If roof is a refuge floor, complied with respective requirements under MOE Code. • Drainage on roof not obstructed.	BO s31(1)(aa) & PNAP APP-126 Appendix G – Control of the projections of signboard on or over streets.	

MW Items	1.21	2.20	2.22
Other considerations	• Existing water proofing of the roof not damaged. • Harbour Planning Guidelines for Victoria Harbour and its Harbour-front Areas issued by the Harbourt-front Enhancement Committee – Harbour planning principles.		

B(P)R represents Building (Planning) Regulations; BA represents Building Authority; BO represents Buildings Ordinance; FSD represents Fire Services Department; HyD represents Highways Department; PNAP represents Practice Notes for Authorized Person, Registered Structural Engineers & Registered Geotechnical Engineers & TD represents Transport Department.

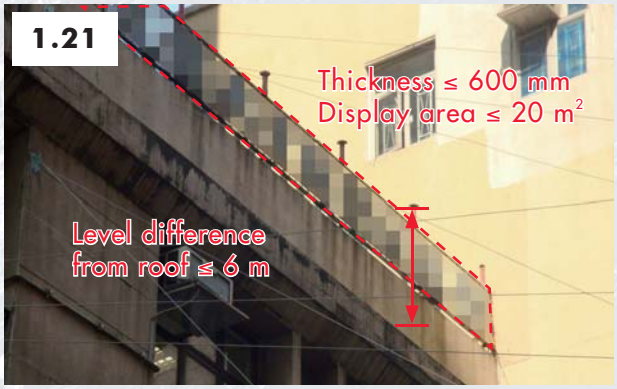

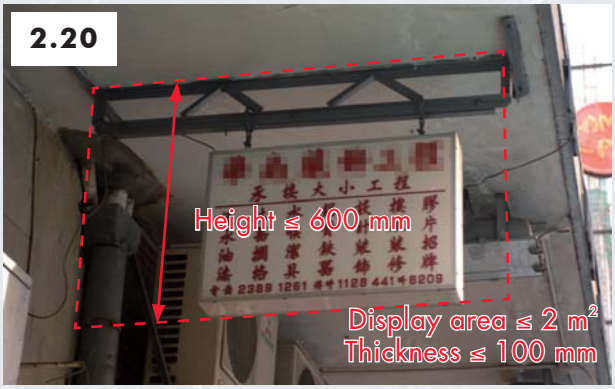

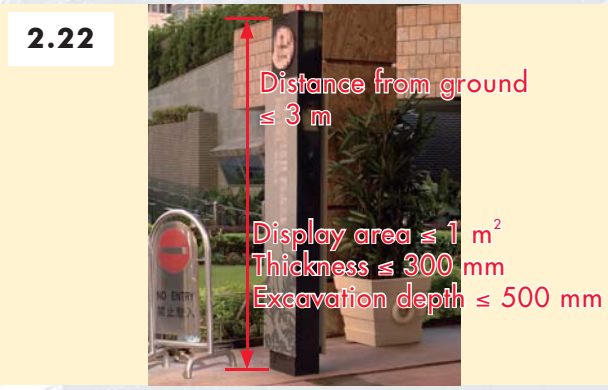

MW Items	1.22	2.19	3.17
Simple Comparison of Descriptions	Erection or alteration … wall signboard …		Erection, alteration or removal … wall signboard (including replacement of display surface …)
	No additional load to cantilevered slab;		
	Not involve alteration of structural elements;		
	With LED, display area		
	> 5 m^2 & ≤ 20 m^2;	≤ 5 m^2;	
	Without LED, display area		
	> 10 m^2 & ≤ 40 m^2; &	≤ 10 m^2; &	≤ 5 m^2;
	Not consist of stone if any part of signboard > 6m from ground.		Any part of signboard ≤ 6 m from ground; &
		Not MW item 3.17 or DEW item 10 (see 6.1).	Not DEW item 10 or 11 (see 6.1).
Other considerations	• BO s31(1)(aa) & PNAP APP-126 Appendix G – Control of the projections of signboard on or over streets. • PNAP APP-126 Appendices C-F, H & I – Design & construction requirements of signboard given by the BA, FSD, TD & HyD, etc. • B(P)R 30 – Natural lighting & ventilation. • Agreement from the IO / co-owners of the external wall / roof (if being common part) should be sought. • If signboard projecting ≤ 600mm over a footpath, clearance ≥ 2.5 m from ground. • Wall signboards at overhead of shopfront should have a clearance ≥ 2.5 m from ground; and should be structurally independent without supporting any roller shutter, air-conditioning unit or being used for storage. • Harbour Planning Guidelines for Victoria Harbour and its Harbour-front Areas issued by the Harbourt-front Enhancement Committee – Harbour planning principles.		

B(P)R represents Building (Planning) Regulations; BA represents Building Authority; BO represents Buildings Ordinance; DEW represents designated exempted works; FSD represents Fire Services Department; HyD represents Highways Department; LED represents light emitting diodes; PNAP represents Practice Notes for Authorized Person, Registered Structural Engineers & Registered Geotechnical Engineers & TD represents Transport Department.

1.22
Projection ≤ 600 mm
Without LED
Display area > 10 m² & ≤ 40 m²
Distance from ground > 6 m

1.22
Projection ≤ 600 mm
With LED
Display area > 5 m² & ≤ 20 m²
Distance from ground > 6m

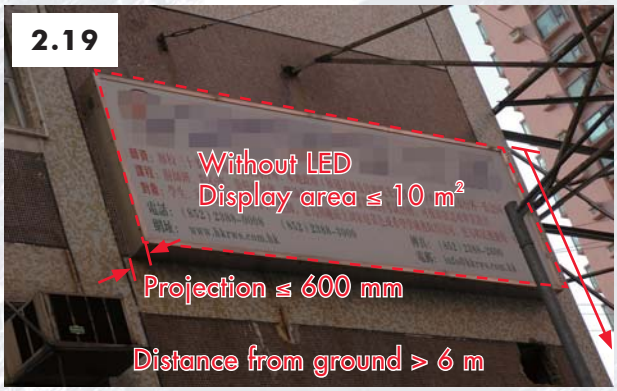
2.19
Without LED
Display area ≤ 10 m²
Projection ≤ 600 mm
Distance from ground > 6 m

2.19
Distance from ground > 6 m
Projection ≤ 600 mm
With LED
Display area ≤ 5 m²

Not Minor Works
Projection > 600 mm
With LED

MW Items	1.23	2.21	2.23
Simple Comparison of Descriptions	Erection or alteration … outdoor signboard fixed on-grade (other than the construction of a spread footing) …		Replacement of display surface of any signboard of MW item 1.20, 1.21, 1.22, 1.23, 2.18, 2.19, 2.20, 2.21 or 2.22.
	Display area ≤ 20 m^2;	Display area ≤ 10 m^2;	
	Thickness ≤ 600 mm; &		
	Any part of signboard ≤ 6 m from ground.	Any part of signboard ≤ 2 m from ground.	
	Not MW item 2.21		
Other considerations	• PNAP APP-126 Appendices C-F, H & I – Design & construction requirements of signboard given by the BA, FSD, TD & HyD, etc. • Associated excavation works & footing may be MW item 1.12 or 2.11 & 1.11 or 2.10. • Agreement from the IO / co-owners of the external wall / roof (if being common part) should be sought.		
	Harbour Planning Guidelines for Victoria Harbour and its Harbour-front Areas issued by the Harbourt-front Enhancement Committee – Harbour planning principles.		

BA represents Building Authority; FSD represents Fire Services Department; HyD represents Highways Department; PNAP represents Practice Notes for Authorized Person, Registered Structural Engineers & Registered Geotechnical Engineers & TD represents Transport Department.

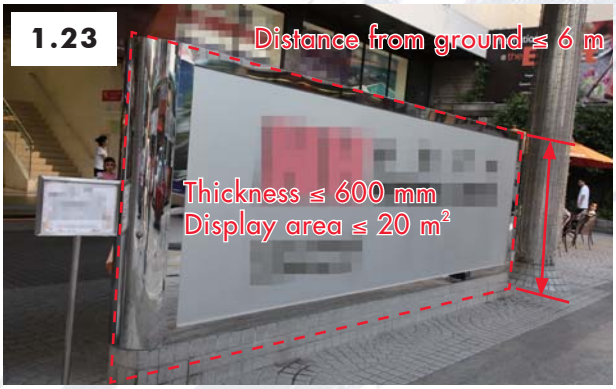

MW Items	1.24	2.24	3.18
Simple Comparison of Descriptions	Removal of any signboard (other than removal of spread footing of any outdoor signboard) other than MW item 2.24, 2.25, 2.26, 2.27, 3.16, 3.17, 3.18, 3.19, 3.20, 3.21 or 3.22 or DEW item 11 (see 6.1).	Removal … projecting signboard	
		Display area ≤ 20 m^2; &	Display area ≤ 2 m^2;
		Not MW item 3.18.	Projects ≤ 2 m; &
			Any part of signboard ≤ 6 m from ground.
Other considerations	Building (Demolition Works) Regulations 5 – Not having the electric cables or the apparatus remained electrically charge.		

DEW represents designated exempted works.

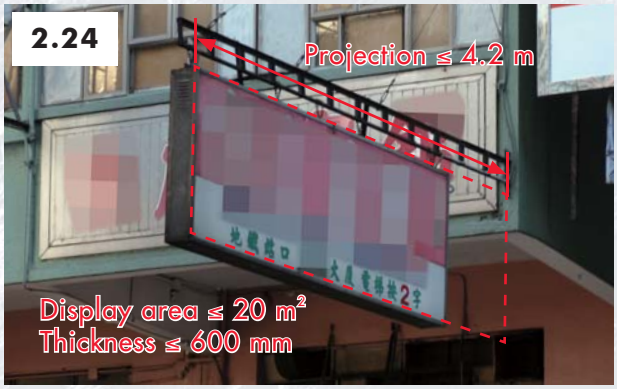

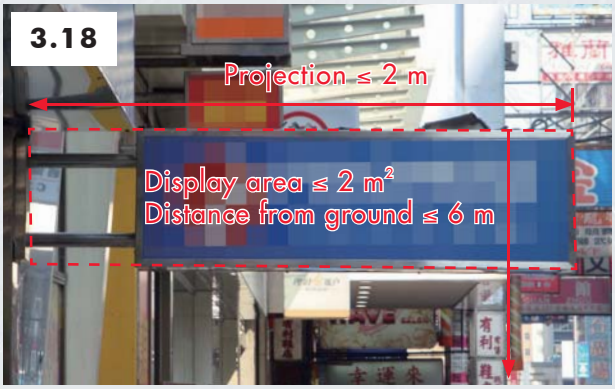

MW Items	2.25	3.19	3.22
Simple Comparison of Descriptions	Removal … signboard on the roof …, or … outdoor signboard … on-grade (other than removal of the spread footing of outdoor signboard), …	Removal … signboard on roof …	Removal … outdoor signboard fixed on-grade (other than removal of the spread footing of any outdoor signboard) …
	Display area		
	≤ 20 m^2; &	≤ 5 m^2;	≤ 1 m^2; &
	Not MW item 3.19 or 3.22.	Height of signboard ≤ 2 m; &	
		Any part of signboard	
		> 1.5 m from the edge of roof.	≤ 3 m from ground.
Other considerations	Building (Demolition Works) Regulations 5 – Not having the electric cables or the apparatus remained electrically charge		

MW Items	2.26	3.20
Simple Comparison of Descriptions	Removal … wall signboard …	
	With LED, display area ≤ 20 m^2;	
	Without LED, display area	
	≤ 40 m^2; &	≤ 10 m^2;
		Any part of signboard ≤ 6m from ground; &
	Not MW item 3.20 or DEW item 11 (see 6.1).	Not DEW item 11 (see 6.1).
Other considerations	B(DW)R 5 – Not having the electric cables or the apparatus remained electrically charge, if applicable.	

B(DW)R represents Building (Demolition Works) Regulations; DEW represents designated exempted works; & LED represents light emitting diodes.

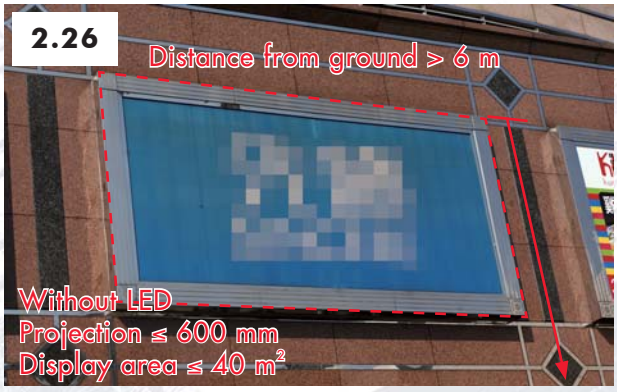

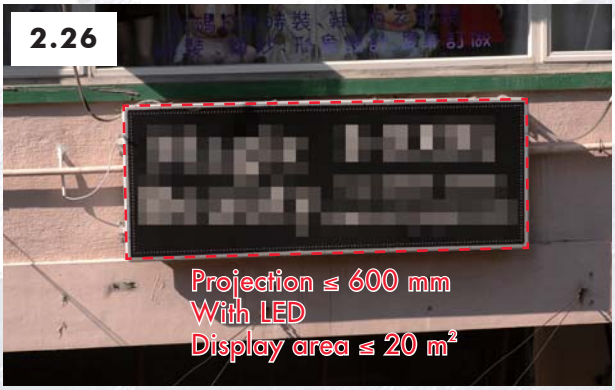

MW Items	2.27	3.21
Simple Comparison of Descriptions	Removal … signboard located on or hung underneath the soffit of a balcony or canopy (other than a cantilevered slab) …	
	Not MW item 3.21.	If on balcony / canopy, display area ≤ 5 m²;
		If hung underneath …, display area ≤ 2 m²; &
		Height of signboard ≤ 1 m.
Other considerations	Building (Demolition Works) Regulations 5 – Not having the electric cables or the apparatus remained electrically charge, if applicable.	

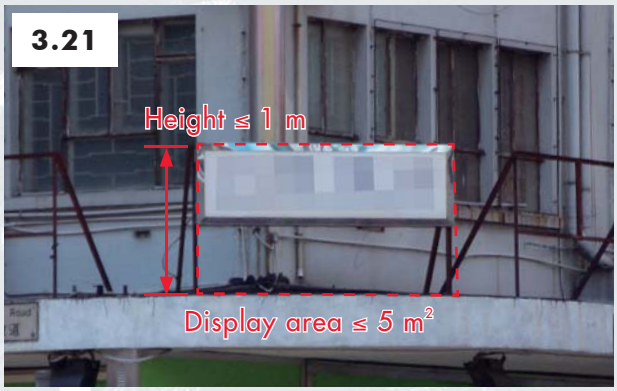

3.19 Supporting Frame / Structure for Air-conditioner & Water Cooling Tower

MW Items	1.5	2.2	3.2
Simple Comparison of Descriptions	Removal …		
	on a cantilevered slab with a span of > 1 m.	on-grade / on a slab;	
		(if cantilevered slab, span ≤ 1 m); &	other than a cantilevered slab;
		Not MW item 3.2.	Height of structure > 1 m & ≤ 2 m; &
			If on roof – (i) > 1.5 m from edge of roof; or (ii) with protective barrier ≥ 1.1 m high at the roof edge.
Other considerations	• Building (Demolition Works) Regulations 5 – Not having the electric cables or the apparatus remained electrically charge. • Report to the Environmental Protection Department if the cooling tower contains asbestos & will be demolished on site. The works must be conducted by registered qualified personnel under the supervision of registered consultant. See 10.6.4 for reference of the standards & guidelines on the handling, transportation & disposal of asbestos containing material.		

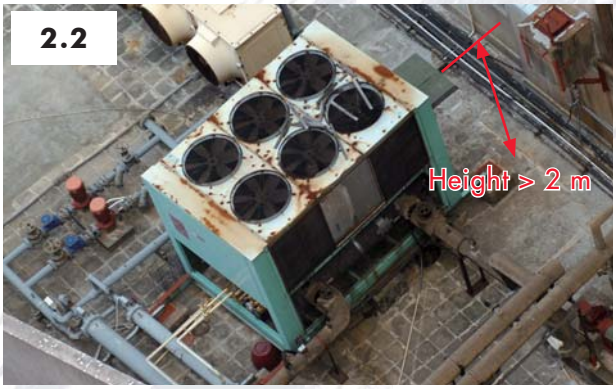

MW Items	1.28	3.27	3.35
Simple Comparison of Descriptions	Erection, alteration or removal …		Strengthening …
			… unauthorized …
	supporting frame for A/C unit or any associated air ducts projecting from external wall …		
	No additional load to cantilevered slab;		
	Projects ≤ 750 mm;	Projects ≤ 600 mm;	
	Highest point of frame > 3 m from ground;		If highest point of frame ≤ 3 m from ground, not project over any street / common part of the building; &
	Designed for an A/C unit		
	> 100 kg; &	≤ 100 kg.	
	Not MW item 3.27.		
Other considerations	• B(P)R 7(3) – Not making undesirable projection. • B(P)R 30 & 31 – Natural lighting & ventilation. • PNAP APP-112 – Proper disposal system for condensation. • Agreement from the IO / co-owners of the common area should be sought for erection of metal frame. • B(DW)R 5 – Not having the electric cables or the apparatus remained electrically charge before alteration or removal. • Report to the Environmental Protection Department if the cooling tower contains asbestos & will be demolished on site. The works must be conducted by registered qualified personnel under the supervision of registered consultant. See 10.6.4 for reference of the standards & guidelines on the handling, transportation & disposal of asbestos containing material.		

B(DW)R represents Building (Demolition Works) Regulations; B(P)R represents Building (Planning) Regulations & PNAP represents Practice Notes for Authorized Person, Registered Structural Engineers & Registered Geotechnical Engineers.

MW Items	1.29	3.28	3.34
Simple Comparison of Descriptions	Erection or alteration …	Erection, alteration or removal …	Strengthening …
			… unauthorized …
	supporting structure for A/C unit, water cooling tower or any associated air ducts on-grade / on a slab (other than a cantilevered slab) …		
	Height of structure ≤ 1.5m; &		
	Designed for an A/C unit / water cooling tower		
	> 150 kg.	≤ 150 kg; &	≤ 100 kg.
		Not DEW item 12 (see 6.1).	
Other considerations	• B(P)R 30 & 31 – Natural lighting & ventilation. • If the structure is fixed on roof & the roof is designated as refuge floor, the respective requirements for refuge floor stipulated in the MOE Code complied with. • Drainage on roof not obstructed. • Existing water proofing of the roof not damaged. • PNAP APP-112 – Proper disposal system for condensation. • Agreement from the IO / co-owners of the common part should be sought for erection of structure. • B(DW)R 5 – Not having the electric cables or the apparatus remained electrically charge before alteration. • Report to the Environmental Protection Department if the cooling tower contains asbestos & will be demolished on site. The works must be conducted by registered qualified personnel under the supervision of registered consultant. See 10.6.4 for reference of the standards & guidelines on the handling, transportation & disposal of asbestos containing material.		

B(DW)R represents Building (Demolition Works) Regulations; B(P)R represents Building (Planning) Regulations; DEW represents designated exempted works; MOE Code represents Code of Practice for the Provision of Means of Escape in Case of Fire 1996 & PNAP represents Practice Notes for Authorized Person, Registered Structural Engineers & Registered Geotechnical Engineers.

3.20 Supporting Structure for Antenna, Transceiver or Radio Base Station on Roof

<table>
<tr><th>MW Items</th><th>1.13</th><th>3.9</th><th>1.14</th></tr>
<tr><td rowspan="6">Simple Comparison of Descriptions</td><td>Erection or alteration …</td><td>Erection, alteration or removal …</td><td>Erection or alteration …</td></tr>
<tr><td colspan="2">supporting structure for an antenna or transceiver on the roof …</td><td>supporting structure for a radio base station solely for telecommunications services in the form of an equipment cabinet on the roof …</td></tr>
<tr><td colspan="3">No additional load to cantilevered slab;</td></tr>
<tr><td colspan="2">No part projects beyond the external wall of the building; &</td><td rowspan="3">Length of cabinet ≤ 1.5 m; width of cabinet ≤ 1 m; & height of cabinet ≤ 2.3 m.</td></tr>
<tr><td colspan="2">Designed for an antenna or transceiver</td></tr>
<tr><td>> 150 kg.</td><td>≤ 150 kg.</td></tr>
<tr><td>Other considerations</td><td colspan="3">• Hong Kong Airport (Control of Obstructions) Ordinance & PNAP APP-32 – Not exceeding the airport height restrictions.
• B(DW)R 5 – Not having the electric cables or the apparatus remained electrically charge before alteration.
• If the roof is designated as refuge floor, the respective requirements for refuge floor stipulated in the MOE Code complied with.
• Prescribed plane for prescribed window for adjacent building on the same site, if any, not obstructed.
• Drainage on roof not obstructed.
• Agreement from the IO / co-owners of the roof (if being common part) should be sought.
• Existing water proofing of the roof not damaged.
• The antenna, transceiver and radio base station in the form of equipment cabinet of a size not larger than 1.5 m (L) × 1 m (W) × 2.3 m (H) are equipment only and not considered as minor works. Erection or alteration of radio base stations larger than 1.5 m (L) × 1 m (W) × 2.3 m (H) are building works requiring prior approval of plans and consent from the BA.
• Guidance Note for Submission of Applications by Operators for the Installation of Radio Base Stations for Public Telecommunications Services in Buildings and on Rooftops issued by the Office of the Telecommunications Authority.</td></tr>
</table>

B(DW)R represents Building (Demolition Works) Regulations & PNAP represents Practice Notes for Authorized Person, Registered Structural Engineers & Registered Geotechnical Engineers.

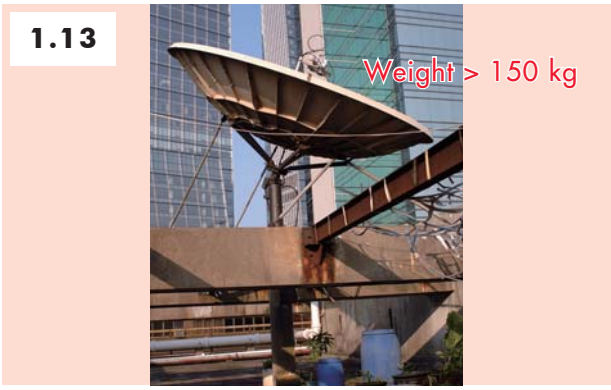

The antenna, transceiver and radio base station in the form of equipment cabinet of a size not larger than 1.5 m (L) × 1 m (W) × 2.3 m (H) are equipment only and not considered as minor works. Erection or alteration of radio base stations larger than 1.5 m (L) × 1 m (W) × 2.3 m (H) are building works requiring prior approval of plans and consent from the BA.

MW Items	2.12	3.8	3.10
Simple Comparison of Descriptions	Removal …		Removal …
	radio base station for telecommunications services in the form of an enclosure or equipment cabinet together with its supporting structure located on the roof of a building …		supporting structure for an antenna or transceiver located on the roof of a building.
	Length of station ≤ 4.5 m;		
	Width of station ≤ 4.5 m;		
	Height of station		
	≤ 2.3 m; &	≤ 2 m;	
	Not MW item 3.8.	Any part of the station > 1.5 m from the edge of roof; &	
		Not involve any concrete structural elements.	
Other considerations	• Building (Demolition Works) Regulations 5 – Not having the electric cables or the apparatus remained electrically charge, if applicable. • The antenna, transceiver and radio base station in the form of equipment cabinet of a size not larger than 1.5 m (L) × 1 m (W) × 2.3 m (H) are equipment only and not considered as minor works.		

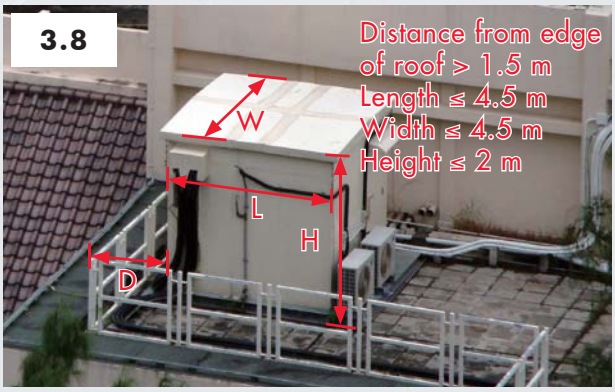

The antenna, transceiver and radio base station in the form of equipment cabinet of a size not larger than 1.5 m (L) × 1 m (W) × 2.3 m (H) are equipment only and not considered as minor works.

3.21 Supporting Structure for Photovoltaic System

MW Items	1.5	2.2	3.2
Simple Comparison of Descriptions	Removal …		
	on a cantilevered slab with a span of > 1 m.	on-grade / on a slab;	
		(if cantilevered slab, span ≤ 1 m); &	other than a cantilevered slab;
		Not MW item 3.2.	Height of structure > 1 m & ≤ 2 m; &
			If on roof – (i) > 1.5 m from edge of roof; or (ii) with protective barrier ≥ 1.1 m high at the roof edge.
Other considerations	Building (Demolition Works) Regulations 5 – Not having the electric cables or the apparatus remained electrically charge.		

MW Items	1.19	3.15
Simple Comparison of Descriptions	Erection or alteration ...	Erection, alteration or removal ...
	on-grade / on a slab (other than a cantilevered slab) ...;	
	Height of structure ≤ 1.5 m; &	
	Designed for ... system with	
	at least 1 module > 200 kg.	module each ≤ 200 kg;
		Not DEW item 12 (see 6.1).
Other considerations	• B(P)R 30 – Natural lighting & ventilation. • Hong Kong Airport (Control of Obstructions) Ordinance & PNAP APP-32 – Not exceeding the airport height restrictions. • B(DW)R 5 – Not having the electric cables or the apparatus remained electrically charge before alteration. • If the roof is designated as refuge floor, the respective requirements for refuge floor stipulated in the MOE Code complied with. • Drainage on roof not obstructed. • Agreement from the IO / co-owners of the roof (if being common part) should be sought. • Existing water proofing of the roof not damaged.	

B(DW)R represents Building (Demolition Works) Regulations; B(P)R represents Building (Planning) Regulations; DEW represents designated exempted works; MOE Code represents Code of Practice for the Provision of Means of Escape in Case of Fire 1996 & PNAP represents Practice Notes for Authorized Person, Registered Structural Engineers & Registered Geotechnical Engineers.

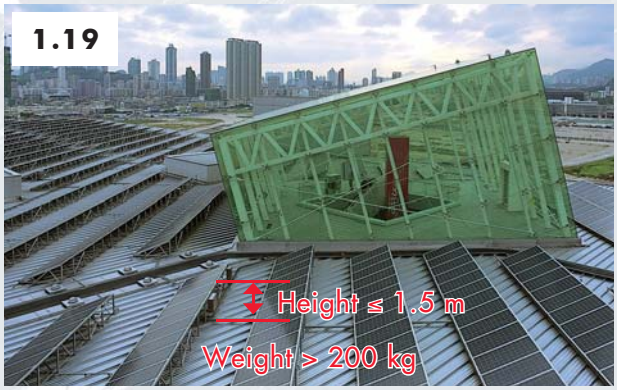

3.22 Supporting Structure for Solar Water Heating System

MW Items	1.5	2.2	3.2
Simple Comparison of Descriptions	Removal …		
	on a cantilevered slab with a span of > 1 m.	on-grade / on a slab;	
		(if cantilevered slab, span ≤ 1 m); &	other than a cantilevered slab;
		Not MW item 3.2.	Height of structure > 1 m & ≤ 2 m; &
			If on roof – (i) > 1.5 m from edge of roof; or (ii) with protective barrier ≥ 1.1 m high at the roof edge.
Other considerations	Building (Demolition Works) Regulations 5 – Not having the electric cables or the apparatus remained electrically charge.		

MW Items	1.18	3.14
Simple Comparison of Descriptions	Erection or alteration ...	Erection, alteration or removal ...
	on-grade / on a slab (other than a cantilevered slab) ...;	
	Height of structure ≤ 1.5 m;	
	Designed for ... system with	
	at least 1 thermal collector > 200 kg; &	thermal collector each ≤ 200 kg;
	If thermal collector & the water tank are integrated, structure ... designed for a system with gross weight (when water tank is in full capacity)	
	> 100 kg/m^2 of the ground / slab area.	≤ 100 kg/m^2 of the ground / slab area; &
		Not DEW item 12 (see 6.1).
Other considerations	• B(P)R 30 – Natural lighting & ventilation. • Hong Kong Airport (Control of Obstructions) Ordinance & PNAP APP-32 – Not exceeding the airport height restrictions. • B(DW)R 5 – Not having the electric cables or the apparatus remained electrically charge before alteration. • If the roof is designated as refuge floor, the respective requirements for refuge floor stipulated in the MOE Code complied with. • Drainage on roof not obstructed. • Agreement from the IO / co-owners of the roof (if being common part) should be sought. • Existing water proofing of the roof not damaged.	

B(DW)R represents Building (Demolition Works) Regulations; B(P)R represents Building (Planning) Regulations; DEW represents designated exempted works; MOE Code represents Code of Practice for the Provision of Means of Escape in Case of Fire 1996 & PNAP represents Practice Notes for Authorized Person, Registered Structural Engineers & Registered Geotechnical Engineers.

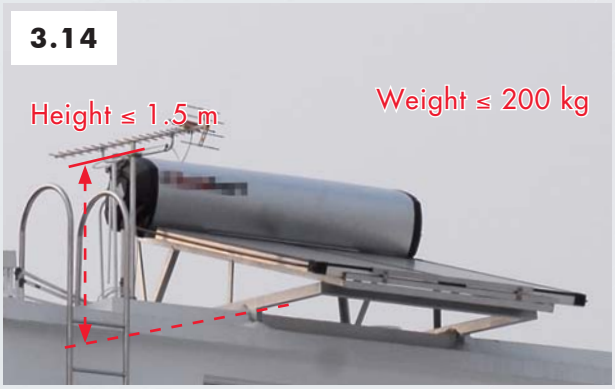

3.23 Window or Window Wall (lowest frame of window or window wall > 1.1m from the adjoining floor)

MW Items	2.8	3.6
Simple Comparison of Descriptions	Construction, alteration or repair of window or window wall ...	
	No additional load to cantilevered slab;	
	Not involve alteration of structural elements, except a simply supported beam that – (i) not of pre-stressed construction; & (ii) not used to support any column, flat slab or ribbed beam;	
	Not form part of existing protective barrier, i.e. the lowest frame of window or window wall > 1.1m from the adjoining floor (see also section 3.13 on p.32)	
	Distance between the highest point of the window or window wall & the ground	
	> 3.5 m,	If ≤ 3.5 m,
	span of structural element of the window or window wall ≤ 6 m; &	
	If ≤ 100 m – (i) involve the main frame of the window or window wall; or (ii) involve the sub-frame of the window or window wall, & length of the sub-frame > 1.2 m; &	If > 3.5 m & ≤ 100 m – (i) involve the sub-frame of the window or window wall only; & (ii) length of the sub-frame ≤ 1.2 m.
	If > 100 m – (i) area of the external wall opening for the window or window wall ≤ 6 m^2; & (ii) length or width (whichever is shorter) of the opening ≤ 1.8 m.	
Other considerations	• B(C)R 90 & FS Code subsection C5 & clause C11.1 – Requirements of fire resisting construction. • B(P)R 29-33 – Natural lighting & ventilation. • Building (Energy Efficiency) Regulation 4, Code of Practice for Overall Thermal Transfer Value in Buildings 1995 & PNAP APP-67 – Energy efficiency in commercial building / hotel. • PNAP APP-24 para. 10 & PNRC 14 – No window opening within 5 m of the MTR vent shaft. • PNAP APP-37 – Curtain wall, window & window wall systems, in particular the guidelines on design, standards & installation of window system, quality & heat soak process of tempered glass, and submission of compliance certificate of test report. • PNAP APP-116 & PNRC – Guidelines on design & installation of aluminium window & fixing of hinges. • Requirements stipulated in B(P)R 3A complied with, if applicable.	

B(C)R represents Building (Construction) Regulations; B(P)R represents Building (Planning) Regulations; FS Code represents Code of Practice for Fire Safety in Buildings 2011; PNAP represents Practice Notes for Authorized Persons, Registered Structural Engineers & Registered Geotechnical Engineers; & PNRC represents Practice Notes for Registered Contractors.

2012/06 Revisions are marked in blue for ease of reference.

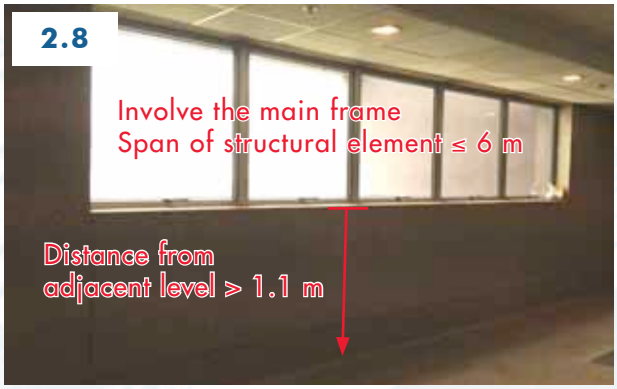

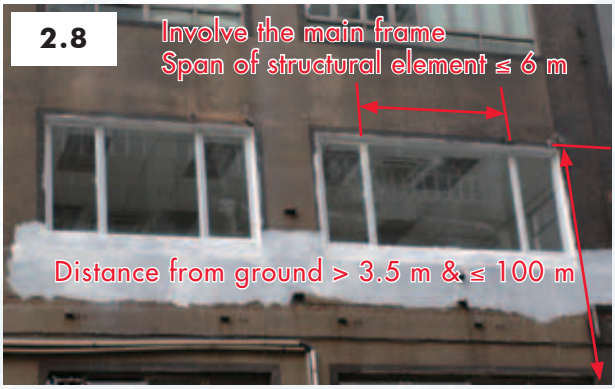

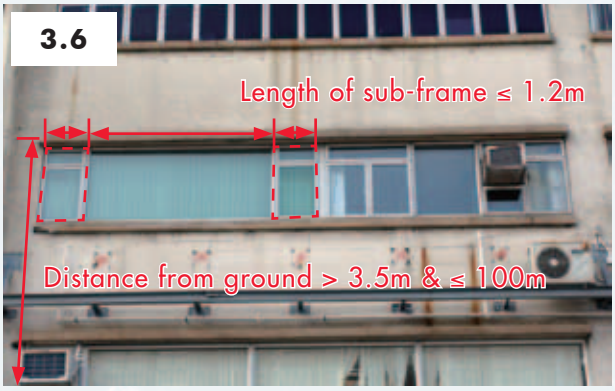

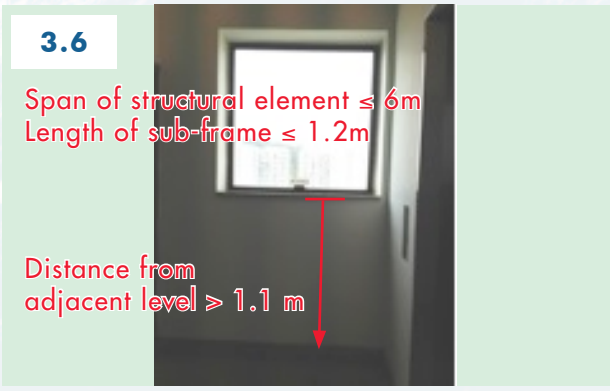

Protective Barrier

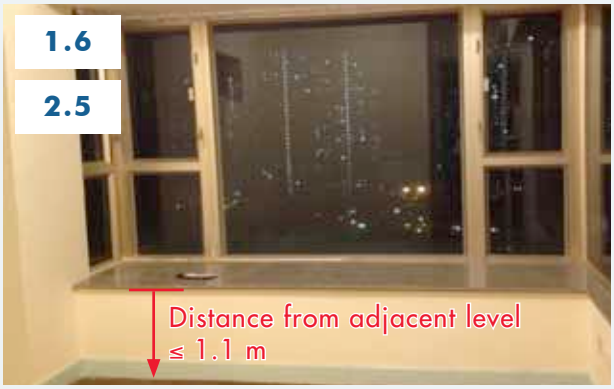

2012/06 Revisions are marked in blue for ease of reference.

MW Items	2.9	3.7
Simple Comparison of Descriptions	Removal of any window or window wall ...	
	Not involve alteration of structural elements;	
	Not form part of existing protective barrier, i.e. the lowest frame of window or window wall > 1.1m from the adjoining floor (see also section 3.13 on p.32)	
	Height of the window or window wall ≤ 6 m; &	Highest point of the window or window wall ≤ 3.5 m from ground.
	Not MW item 3.7.	
Other considerations	• B(C)R 90 & FS Code subsection C5 & clause C11.1 – Requirements of fire resisting construction. • B(P)R 29-33 – Natural lighting and ventilation. Prescribed windows not removed. • Building (Energy Efficiency) Regulation 4, Code of Practice for Overall Thermal Transfer Value in Buildings 1995 & PNAP APP-67 – Energy efficiency in commercial building / hotel. • PNAP APP-24 para. 10 & PNRC 14 – No window opening within 5 m of the MTR vent shaft. • PNAP APP-116 and PNRC – Guidelines on design and installation of aluminium window and fixing of hinges. • Requirements stipulated in B(P)R 3A complied with, if applicable.	

B(C)R represents Building (Construction) Regulations; B(P)R represents Building (Planning) Regulations; FS Code represents Code of Practice for Fire Safety in Buildings 2011; PNAP represents Practice Notes for Authorized Persons, Registered Structural Engineers & Registered Geotechnical Engineers; & PNRC represents Practice Notes for Registered Contractors.

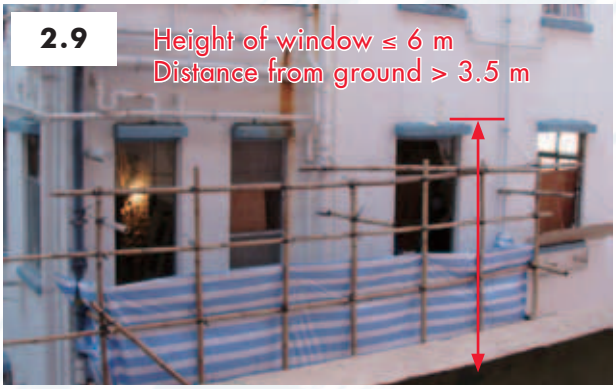

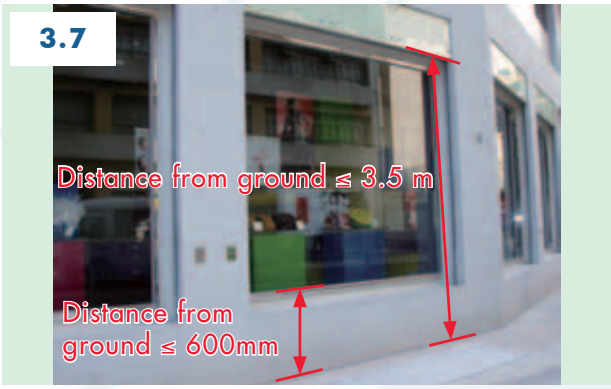

2012/06 Revisions are marked in blue for ease of reference.

4 Statutory Procedures for Carrying Out "Minor Works"

4.1 Obtaining Prior Approval and Consent

4.1.1 After the introduction of the "minor works control system" ("MWCS"), "minor works" ("MW") may also always be proceeded following the existing mechanism in "obtaining prior approval and consent" as required under section 14(1) of the Buildings Ordinance ("BO").

4.1.2 An Authorized Person ("AP") (and a Registered Structural Engineer ("RSE") and/or a Registered Geotechnical Engineer ("RGE") where necessary) should be appointed for the design, preparation and submission of prescribed plans and details, application for approval of plans and application for the consent to commencement of works, coordination of works and periodic supervision of the works carried out by the registered contractors, etc.. A Registered General Building Contractor ("RGBC"), a Registered Specialist Contractor ("RSC") or a Registered Minor Works Contractor ("RMWC") has also to be appointed for the carrying out of the works.

4.1.3 Within 14 days after the date of completion of works, the AP (and RSE and/or RGE where applicable) are required to certify that the works have been completed in accordance with approved plans and details and are structurally by safe, and then submit to the Building Authority ("BA") the certificate of completion.

4.2 Simplified Requirements

– Appointment –

4.2.1 Apart from "obtaining prior approval and consent" from the BA under section 14(1) of the BO, "the person who arranged for the works to be carried out" may choose to commence "minor works" under the "simplified requirements" without "obtaining prior approval and consent," under section 14AA of the BO. A "prescribed registered contractor[4]" ("PRC") of different qualifications and/or "prescribed building professional[5]" ("PBP") as appropriate shall be appointed according to the class and type of MW to be carried out.

4.2.2 Under section 27 of the Building (Minor Works) Regulation ("B(MW)R or the Regulation"), the appointment of PBP is only required for Class I MW commenced under the "simplified requirements". The appointed AP will be responsible for the design and supervision of the works carried out by the appointed PRC. If the item of works involves any complicated structural or geotechnical elements, it is required to appoint RSE or RGE for their respective assistance on the design and supervision of works. Class II and Class III MW, however, can be designed, supervised and carried out by PRC without the appointment of PBP.

4. The "prescribed registered contractor" can be a RGBC, a RSC or a RMWC.

5. The "prescribed building professional" is an AP (and a RSE and/or a RGE if necessary).

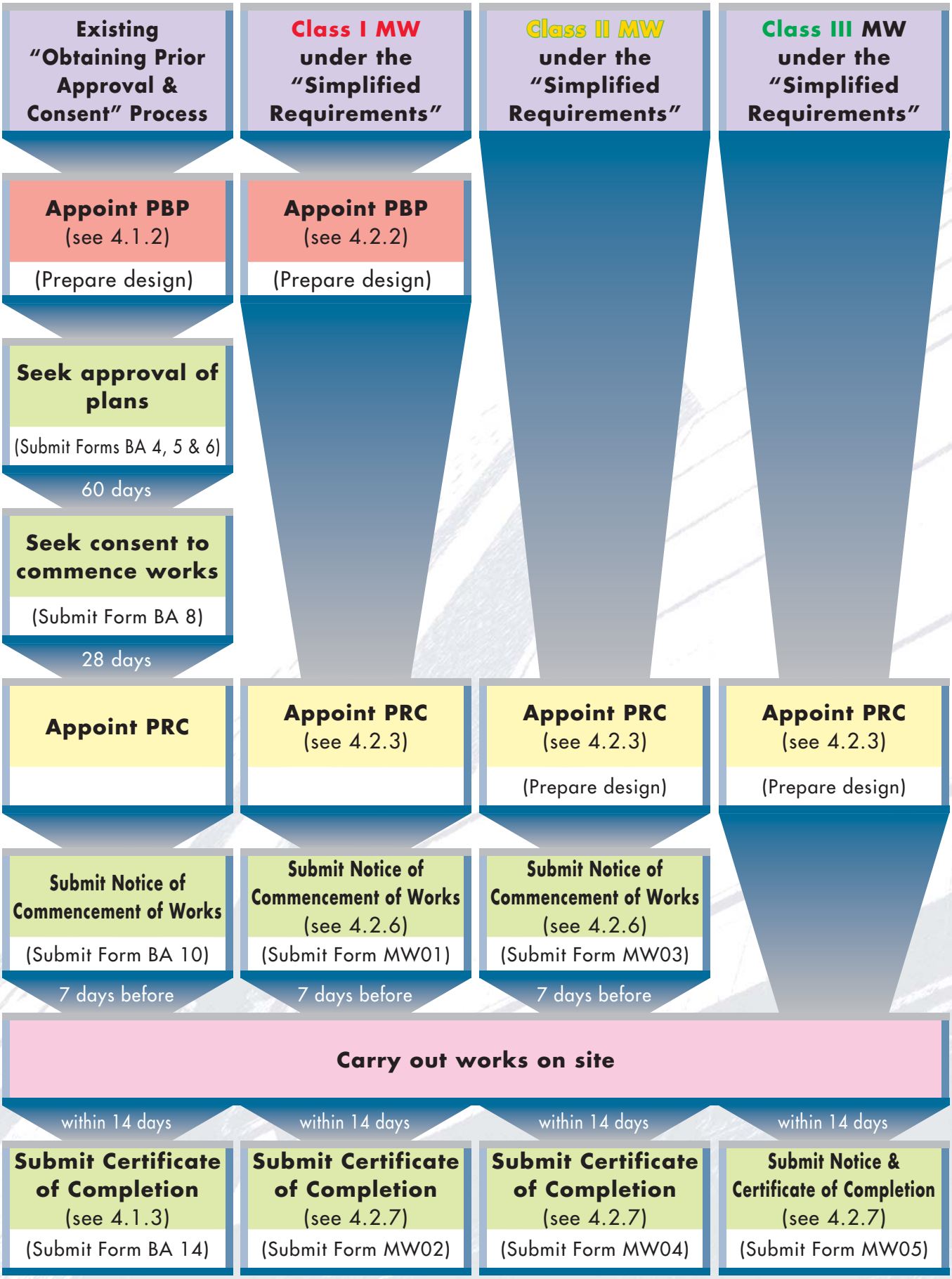
Existing "Obtaining Prior Approval & Consent" Process
Class I MW under the "Simplified Requirements"
Class II MW under the "Simplified Requirements"
Class III MW under the "Simplified Requirements"
Appoint PBP (see 4.1.2)
(Prepare design)
Appoint PBP (see 4.2.2)
(Prepare design)
Seek approval of plans
(Submit Forms BA 4, 5 & 6)
60 days
Seek consent to commence works
(Submit Form BA 8)
28 days
Appoint PRC
Appoint PRC (see 4.2.3)
Appoint PRC (see 4.2.3)
(Prepare design)
Appoint PRC (see 4.2.3)
(Prepare design)
Submit Notice of Commencement of Works
(Submit Form BA 10)
7 days before
Submit Notice of Commencement of Works (see 4.2.6)
(Submit Form MW01)
7 days before
Submit Notice of Commencement of Works (see 4.2.6)
(Submit Form MW03)
7 days before
Carry out works on site
within 14 days
within 14 days
within 14 days
within 14 days
Submit Certificate of Completion (see 4.1.3)
(Submit Form BA 14)
Submit Certificate of Completion (see 4.2.7)
(Submit Form MW02)
Submit Certificate of Completion (see 4.2.7)
(Submit Form MW04)
Submit Notice & Certificate of Completion (see 4.2.7)
(Submit Form MW05)

2010/10

4.2.3 Under section 28 of the B(MW)R, "appropriate" PRC should also be appointed for carrying out different classes, types or items of MW. A RGBC is able to undertake all items of MW regardless of their classes or types. A RSC, depending on the category of works they are registered for, can carry out the items of MW specified in section 28 of the B(MW)R. A RMWC can only carry out the type(s) or item(s) of MW that they are registered for. Details can be referred to section 28 of the B(MW)R or the summary provided at Appendix III for reference.

4.2.4 A RMWC registered in the name of a company [or known as "RMWC(Co)] can only carry out the type(s) of MW under the class for which he is registered with an "authorized signatory" and the class of registration is downward compatible. For practitioners registered as a RMWC on individual basis [or known as "RMWC(Ind)"], they can only carry out the item(s) of MW for which they have been registered under Class III.

4.2.5 In order to facilitate the public to ascertain and appoint appropriate registered contractor in respect of the MW, a Practice Note for Registered Contractors ("PNRC") was issued advising registered contractors who are prepared to carry out MW to display clearly and conspicuously their registration number and relevant details on their publicity materials[6].

– Notification –

4.2.6 Upon the appointment of PRC and/or PBP by "the person who arranged for the works to be carried out", the appointed person should submit to the BA at least 7 days before the commencement of any Class I and Class II MW a notification in the prescribed manners (see 4.2.8). For Class III MW, as they have lower level of risk to safety and of smaller scale, no notification is required before the commencement of works.

4.2.7 On completion of any item of MW regardless of their class, type or size, a certificate or notification (as the case may be) in the prescribed manners should be submitted to the BA within 14 days of completion for certifying the MW completed under the simplified requirements.

– Submission –

4.2.8 Under the B(MW)R, the prescribed manners generally refer to:

(a) the submission in the specified form of notification of commencement or certificate of completion (a checklist of the specified forms is provided at Appendix IV for reference);
(b) photograph(s) showing the physical condition of the premises immediately before the commencement and after the completion of the works (see 4.2.12);
(c) prescribed plans and details[7] of the works and any revision as completed (see 4.2.10); and
(d) if required by section 6.4 of the Technical Memorandum for Supervision Plans 2009, a supervision plan for Class I MW.

6. Refer to PNRC 70 "Display of Registration Numbers of Registered Contractors on Publicity Materials" for details.

7. Prescribed plans and details are the plans and details prescribed in regulation 8 of the Building (Administration) Regulations.

4.2.9 According to section 37 of the B(MW)R, all prescribed plans and details or plans that are required to be submitted under the Regulation must be prepared and signed by the appointed person.

Appointed person to prepare & sign	PBP			PRC
	AP	RSE	RGE	
Class I	Building plans; certain foundation plans[8], structural details or calculations	Foundation plans, structural details or calculations	Geotechnical plans, assessment, details, calculations or reports	
Class II				Prescribed plans & details
Class III				Plans or description of works

4.2.10 Plans and sections of MW to be submitted must be clear[9] and the location of which must be identifiable. Sections 38 and 39 of the B(MW)R stipulate a minimum ratio of plans and other requirements:

(a) at least 1:100 for plans and sections of MW and if necessary, it may be 1:5 or 1:10 for blow up details (in A3 size is recommended);

(b) at least 1:500 for block plans of MW;

(c) material of plan must be durable; and

(d) the plans must be coloured[10] to differentiate existing works from new works and one part of any new works from other parts.

8. AP can prepare and sign the foundation plans, structural details or calculations provided:
   (a) height of the construction ≤ 10 m;
   (b) span of structural element of the construction ≤ 6 m;
   (c) structural elements are built of timber, masonry, steel, plain/reinforced concrete;
   (d) spread footing construction with a ground bearing pressure ≤ 300 kPa; and
   (e) no structural alteration to any existing load-bearing structural elements.

9. Plans submitted will be taken for subsequent electronic imaging. To improve the quality, recommended guidelines on the drawing standards are set out in PNAP ADM-10 "Imaging Standards for Plans", for example, plan sizes, borders and etc.

10. The standards and preferred colours recommended for colouring of plans are detailed in PNAP ADM-9 "Colouring of Plans". The list of preferred colours is extracted in Appendix V for reference.

4.2.11 Recommended design and details for Classes II and III MW are provided at Appendix VII for reference of the requirement and level of depth of the submission. The works on site will truly depend on their case merits.

4.2.12 Photographs should be taken at the same location and angle for ease of comparison of the site conditions before and after the works. The image should be clear to show the subject MW item and the environmental factors such as the distance from ground or edge of roof governing the classes of MW. More than one photo may be necessary to clearly show the details of works. It may also be necessary to make use of a measuring tape to show the critical dimensions when taking the photos. If MW are carried out on the external wall and it is difficult to take a clear picture on ground, for example a supporting frame for an air-conditioning unit at the re-entrant, it is recommended to take the photo internally at any window close to the works or at the works area direct for showing what have been done before and after the works. The following plan gives some best possible locations for safely taking of clear photos.

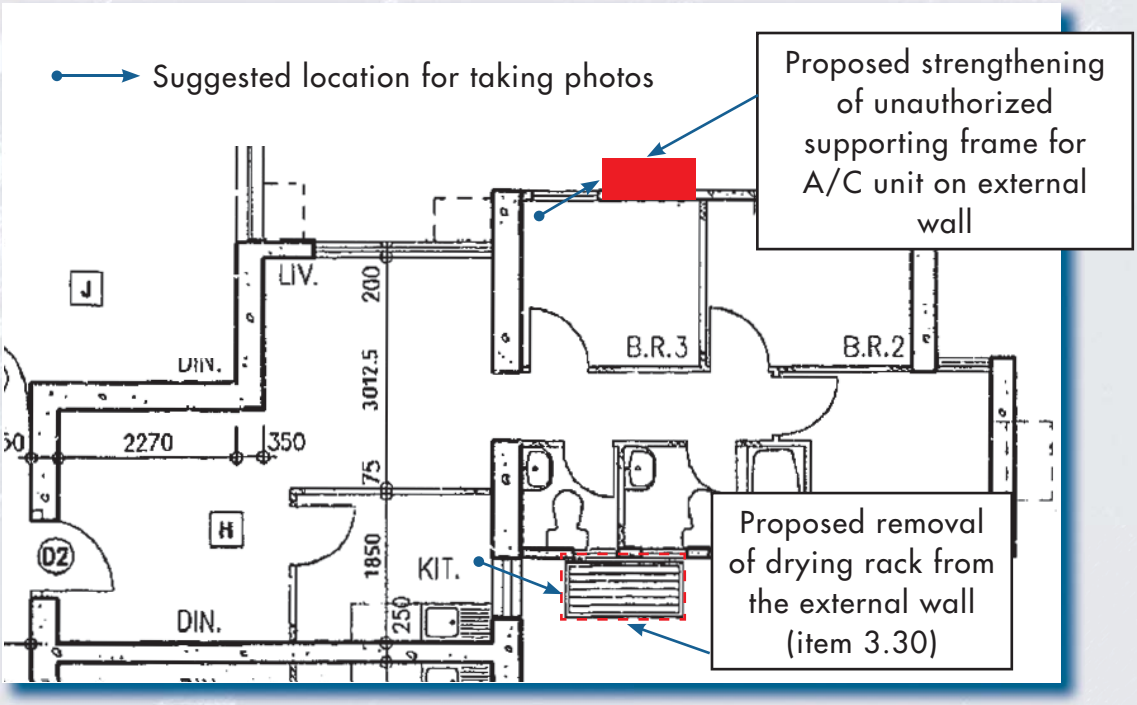

4.2.13 Additional or supplementary document when considered necessary for the submission is recommended to be submitted with Form MW33.

4.3 "Simplified Requirements" in respect of Class I Minor Works [s.30 to 32 of B(MW)R]

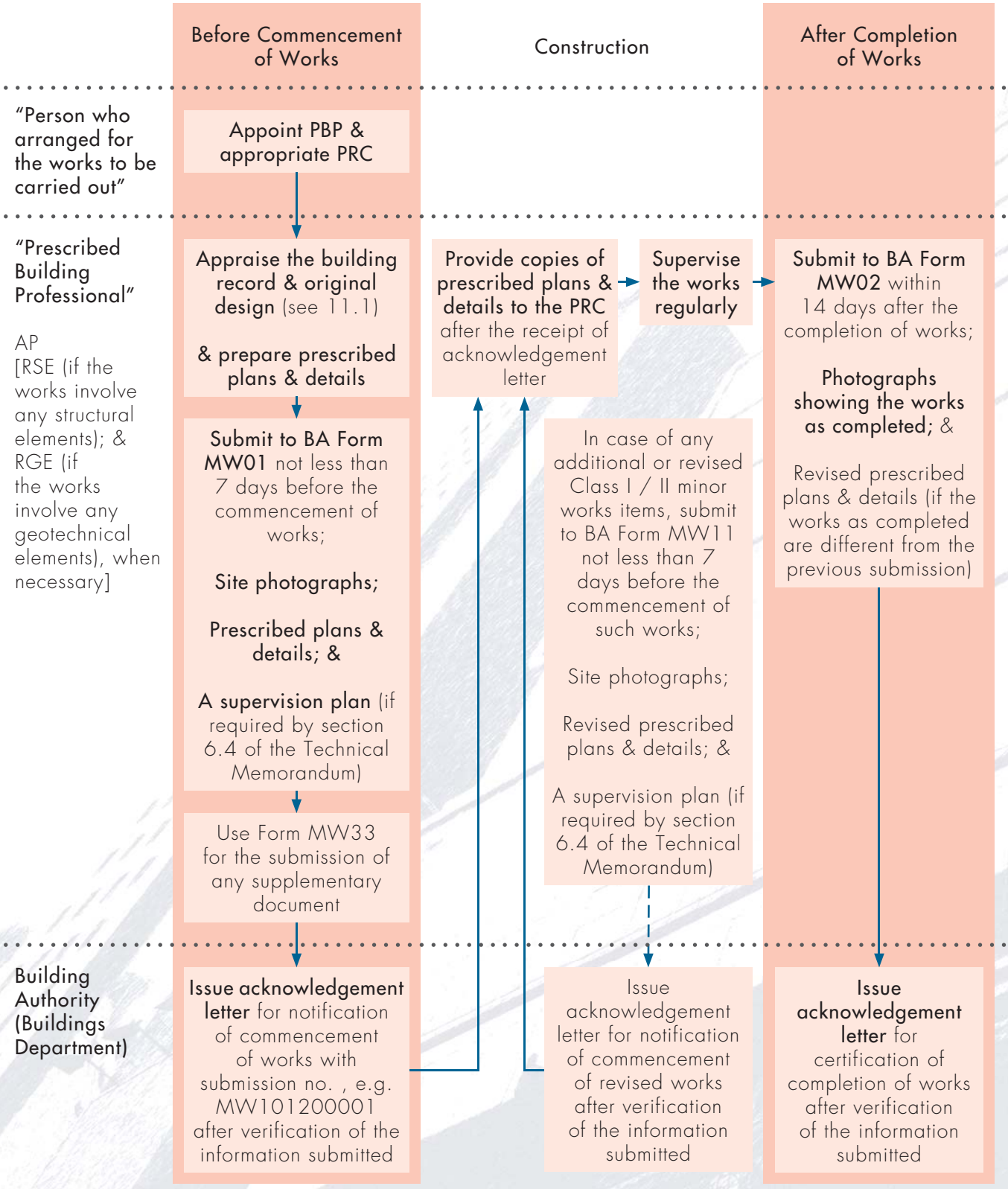

Audit checks may be carried out by the BA upon receipt of the above notices to ascertain compliance with the statutory requirements and ensure the quality and standard of such "minor works". The appointed person will be notified of any irregularity found. The BA may also consider taking appropriate enforcement, disciplinary and/or prosecution action against non-compliance.

Other information recommended to be submitted with the prescribed plans and details for the following MW items:

MW items	Information to be submitted
Building works associated with service lift – 1.3 & 1.33	Rated load, internal floor area & height of the service lift car
Canopy – 1.27	Dimensions & material of the canopy
Drainage – 1.25, 1.26 & 1.36	Size, material & standards of the drainage pipes & fittings
Panel fixed by metal dowel – 1.31	Material & standards of the internal wall panel
Fence wall or external mesh fence – 1.7 to 1.10	Height, material & standards of the fence wall / mesh fence
Metal gate – 1.16 & 1.40	Operating mode, height, weight of each leaf & locking devices (for gates at fire exit only) of metal gate
Opening in floor slab – 1.35	Approved building record showing the original loading design of the supporting elements for works to be completed in accordance with the original design
Removal of chimney – 1.37	Dimensions of the chimney
Repair of structural elements – 1.17	Approved building record showing the original loading design of the supporting elements for works to be completed in accordance with the original design
Signboard – 1.20 to 1.24	Dimensions, material & any displaying devices of the signboard
Supporting structure / frame for A/C & water cooling tower – 1.28 & 1.29	Dimensions of the frame / structure & weight of the equipment
Supporting structure for antenna, transceiver or radio base station – 1.13 & 1.14	Dimensions of the equipment cabinet & weight of the antenna / transceiver
Supporting structure for photovoltaic system – 1.19	Dimensions of the structure & weight of the equipment
Supporting structure for solar water heating system – 1.18	Dimensions of the structure, weight & loading of the equipment

4.4 "Simplified Requirements" in respect of Class II Minor Works [s.33 to 35 of B(MW)R]

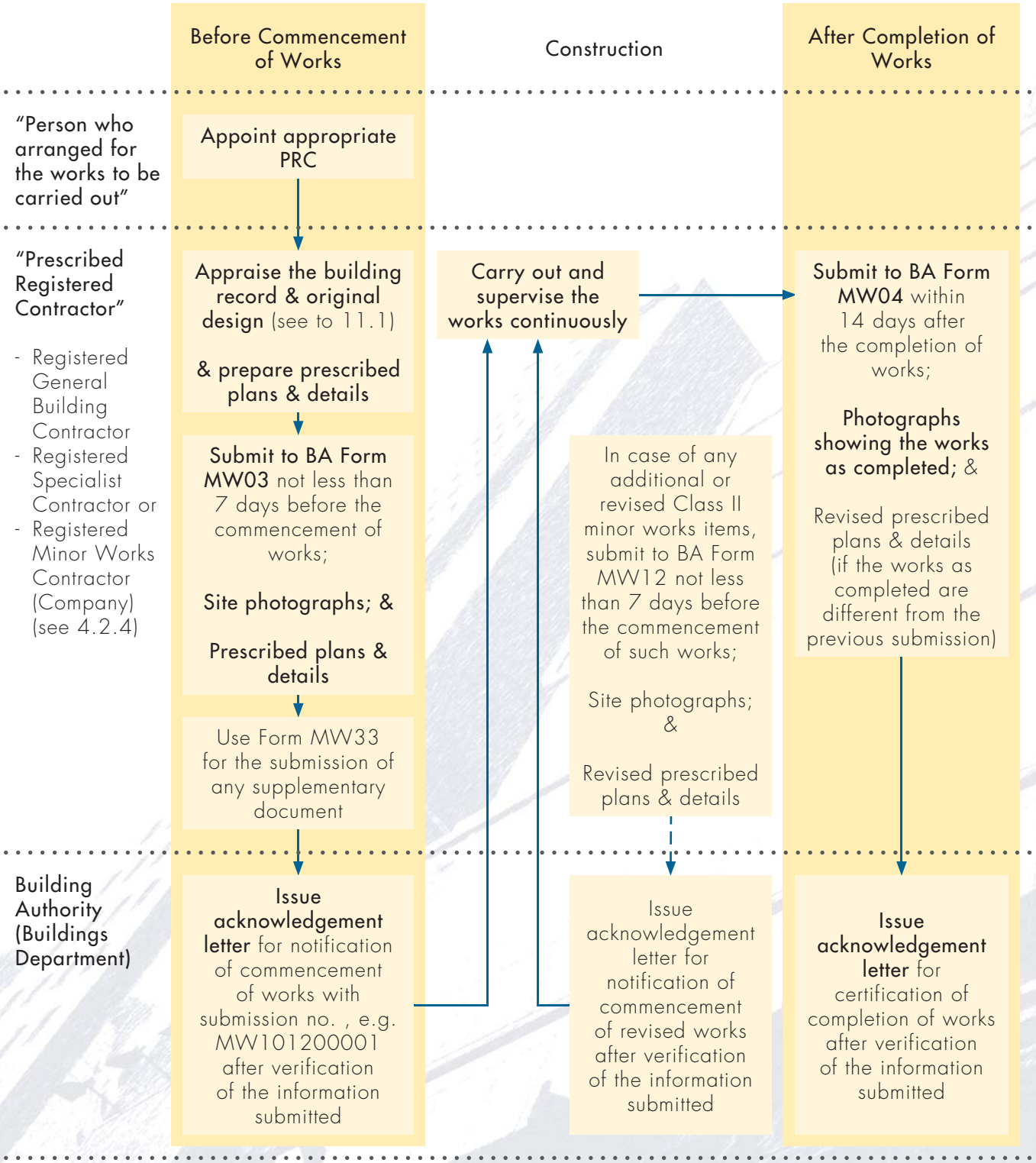

Audit checks may be carried out by the BA upon receipt of the above notices to ascertain compliance with the statutory requirements and ensure the quality and standard of such "minor works". The appointed person will be notified of any irregularity found. The BA may also consider taking appropriate enforcement, disciplinary and/or prosecution action against non-compliance.

Other information recommended to be submitted with the prescribed plans and details for the following MW items:

MW items	Information to be submitted
Drainage – 2.28 to 2.30 & 2.36	Size, material & standards of the drainage pipes & fittings
Panel fixed by metal dowel – 2.33	Material & standards of the internal wall panel
Fence wall or external mesh fence – 2.6 & 2.7	Height, material & standards of the fence wall / mesh fence
GRP water tank – 2.3 & 2.4	Approved building record showing the original loading design of the supporting elements for works to be completed in accordance with the original design, capacity & water head of the GRP water tank
Metal gate – 2.16 & 2.40	Operating mode, height, weight of each leaf & locking devices (for gates at fire exit only) of metal gate
Opening in floor slab – 2.35	Approved building record showing the original loading design of the supporting elements for works to be completed in accordance with the original design
Protective barrier – 2.5	Approved building record showing the original loading design of the supporting elements for works to be completed in accordance with the original design
Removal of architectural projections, canopy & supporting frame for an A/C unit or any associated air ducts – 2.31	Dimensions of the architectural projection
Removal of chimney – 2.37	Dimensions of the chimney
Repair of structural elements – 2.17	Approved building record showing the original loading design of the supporting elements for works to be completed in accordance with the original design
Signboard – 2.18 to 2.27	Dimensions, material & any displaying devices of the signboard
Supporting structure for antenna, transceiver or radio base station – 2.12	Dimensions of the station together with the structure
Window or window wall – 2.8 & 2.9	Dimensions, design, material & standards or testing certificates of the window / window wall

4.5 "Simplified Requirements" in respect of Class III Minor Works [s.36 of B(MW)R]

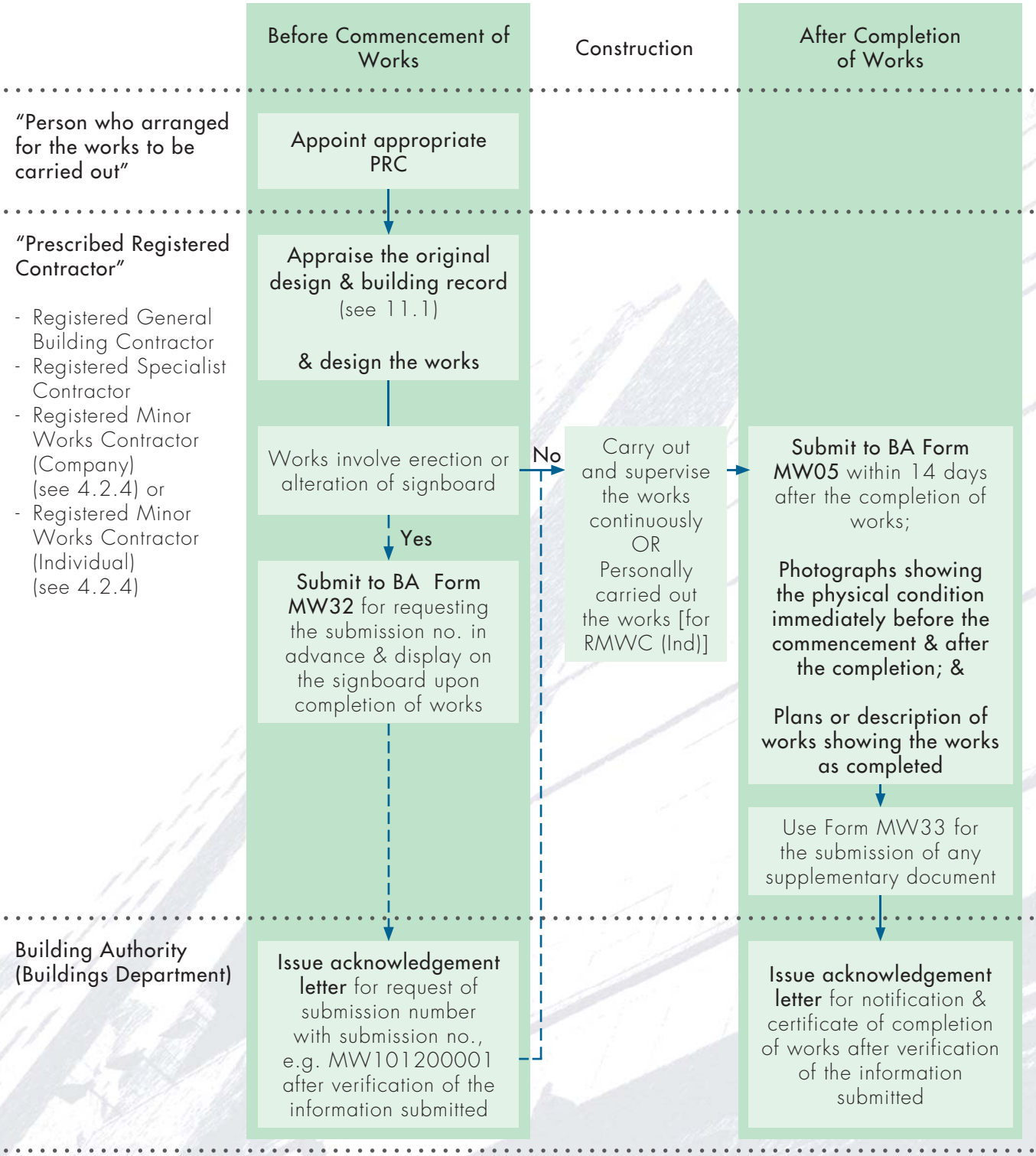

Audit checks may be carried out by the BA upon receipt of the above notice to ascertain compliance with the statutory requirements and ensure the quality and standard of such "minor works". The appointed person will be notified of any irregularity found. The BA may also consider taking appropriate enforcement, disciplinary and/or prosecution action against non-compliance.

Other information recommended to be submitted with the plans or description of works for the following MW items:

MW items	Information to be submitted
Canopy – 3.25, 3.37 & 3.38	Dimensions & material of the canopy
Drainage – 3.23 & 3.24	Size, material & standards of the drainage pipes & fittings
Drying rack –3.29, 3.30 & 3.36	Dimensions of the drying rack
External rendering, external wall / roof tiles – 3.31	Material & standards of the external wall cladding
Fence wall or external mesh fence – 3.4 & 3.5	Height, material & standards of the fence wall / mesh fence
Metal gate – 3.13 & 3.33	Operating mode, height, weight of each leaf & locking devices (for gates at fire exit only) of metal gate
Protective barrier – 3.3	Approved building record showing the original loading design of the supporting elements for works to be completed in accordance with the original design
Removal of architectural projections, canopy & supporting frame for an A/C unit or any associated air ducts – 3.26	Dimensions of the architectural projection
Signboard – 3.16 to 3.22	Dimensions, material & any displaying devices of the signboard
Supporting structure / frame for A/C & water cooling tower – 3.2, 3.27, 3.28, 3.34 & 3.35	Dimensions of the frame / structure & weight of the equipment
Supporting structure for antenna, transceiver or radio base station – 3.8, 3.9 & 3.10	Dimensions of the station together with the structure & weight of the antenna / transceiver
Supporting structure for photovoltaic system – 3.15	Dimensions of the structure, weight & loading of the equipment
Supporting structure for solar water heating system – 3.14	Dimensions of the structure, weight & loading of the equipment
Window or window wall – 3.6 & 3.7	Dimensions, design, material & standards or testing certificates of the window / window wall

5 Exempted Building Works ("EBW")

5.1 Under section 41(3) of the Buildings Ordinance ("BO"), except drainage works, ground investigation in the "scheduled areas", site formation works or "minor works", building works not involving the structure of the building may be carried out in any building without "obtaining prior approval and consent" from the Building Authority ("BA"), and the appointment of building professionals[11] and registered contractors[12].

5.2 Exemption also applies to drainage works (except "minor works") in any building on conditions under section 41(3C) of the BO.

5.3 Such building or drainage works mentioned above are generally called "exempted building works". The works shall not be carried out in contravention of any regulation, i.e. the works shall comply with building standards stipulated in the regulations and related codes of practice.

5.4 "The person who arranged for the works to be carried out" should appoint a competent contractor. If in doubts, advice from the building professionals or the BA is encouraged for ensuring that the works to be carried out are really EBW.

5.5 The contractors should ensure that the EBW to be carried out will not contravene any regulations. Should any contravention be identified, an order made under section 24 of the BO may be served requiring the demolition or alteration of such building works to put an end to the contravention or to make the works complying with the regulations.

5.6 Although it is not required to obtain approval before the carrying out of the EBW, contractors are always reminded to observe the good practices of checking the approved building records on the internet through the BRAVO system (http://bravo.bd.gov.hk) or from the "Building Information Centre" ("BIC") of the Buildings Department before the commencement of works. Adequate safety and precautionary measures (detailed in Chapter 11) should always be provided by the contractors to protect themselves, the public and avoid any possible damages to the properties.

11. Building professionals include the AP, RSE and/or RGE

12. Registered contractors include RGBC, RSC or RMWC.

6 Designated Exempted Works ("DEW")

6.1 15 Items

6.1.1 Apart from the introduction of "minor works" into the new building control regime, certain building works which would not have been exempted under section 41(3) of the Buildings Ordinance ("BO or the Ordinance") and of which the risk to safety and scale are even lesser than minor works have been identified and named as "designated exempted works".

6.1.2 Under section 41(3B) of the BO, DEW may be carried out on prescribed conditions[13] without "obtaining prior approval and consent" from the Building Authority ("BA"), and the appointment of building professionals and registered contractors.

Item	Designated Exempted Works	
1.	Formation of an opening in floor slab • No additional load to cantilevered slab • No alteration of other structural elements • 2 farthest points of the opening ≤ 150mm from each other • Any existing opening ≥ 450mm from the centre of the proposed opening	
2.	Reinstatement of an opening in floor slab according to the original design • No additional load to cantilevered slab • No alteration of other structural elements • 2 farthest points of the opening ≤ 150mm from each other	
3.	Replacement of a GRP water tank according to the original design • Capacity of the tank ≤ $9m^3$ • Water head of the tank ≤ 2m • The tank > 1.5m from the edge of roof (if applicable)	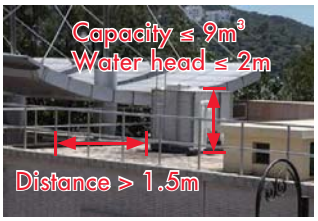
4.	Removal of a GRP water tank • Capacity of the tank ≤ $9m^3$ • The tank > 1.5m from the edge of roof (if applicable)	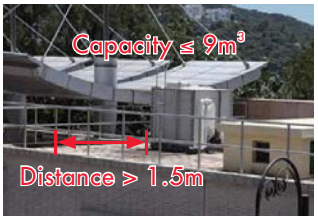

13. Detailed criteria of the 15 DEW are listed in Schedule 2 of the B(MW)R.

Item	Designated Exempted Works
5.	Removal of a solid fence wall • On-grade • Height of wall ≤ 1.1m
6.	Removal of an external mesh fence • On-grade • Height of fence ≤ 3m
7.	Laying, repair or removal of external rendering, external wall tile or roof tile • In case of repair of external rendering, highest point of the area to be repaired ≤ 3m from the adjoining ground/level • If it is not repair of external rendering, highest point of render/wall tile ≤ 3m from the adjoining ground/level • In case of roof tile, grandient of roof ≤ 1:4 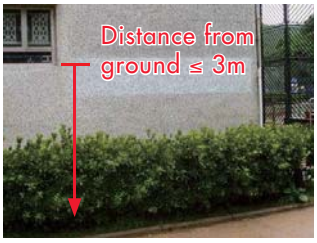
8.	Erection, alteration, repair or removal of a metal gate at fence wall or entrance to a building • No additional load to cantilevered slab • No alteration of other structural elements • Weight of each leaf ≤ 100kg • Width of each leaf ≤ 1.2m • Height of gate ≤ 2.2m 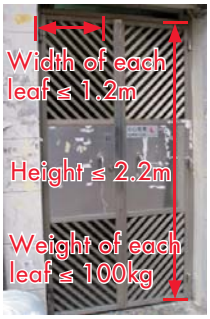
9.	Excavation work • Depth ≤ 0.3m • Not in "scheduled areas" No. 1 or 3

Item	Designated Exempted Works
10.	Erection or alteration of a wall signboard (including the replacement of display surface) • No additional load to cantilevered slab • No alteration of other structural elements • Display area ≤ 1m^2 • No LED display • Projection ≤ 150mm • Highest point of signboard ≤ 3m from ground (In case of signboard over a footpath, any part of the signboard should have a clearance ≥ 2.5m from ground. Wall signboards at overhead of shopfront should also be structurally independent without supporting any roller shutter, air-conditioning unit or being used for storage.)
11.	Removal of a wall signboard • Display area ≤ 1m^2 • No LED display • Projection ≤ 600mm • Highest point of signboard ≤ 3m from ground
12.	Removal of supporting structure for an air-conditioning unit, water cooling tower, solar water heating system or photovoltaic system • On-grade or on a slab (not cantilevered) • Height of the structure ≤ 1m • If the structure is located on roof, the structure > 1.5m from the edge of roof or there is a protective barrier with height ≥ 1.1m at the edge of roof
13.	Erection, alteration or removal of metal supporting frame for an air-conditioning unit or any associated duct • No additional load to cantilevered slab • Projection ≤ 600mm • Weight of the cooling plant ≤ 100kg • Highest point of frame ≤ 3m from ground • No projection over street or common part of building 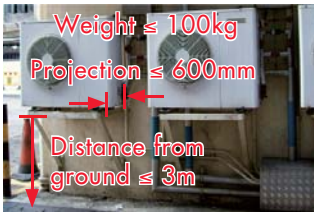

Item	Designated Exempted Works
14.	Erection, alteration or removal of canopy • No additional load to cantilevered slab • Not constructed of concrete • Projection ≤ 500mm • Highest point of canopy ≤ 3m from ground • No projection over street or common part of building
15.	Erection, alteration or removal of drying rack • No additional load to cantilevered slab • Projection ≤ 750mm • Highest point of rack ≤ 3m from ground • No projection over street or common part of building 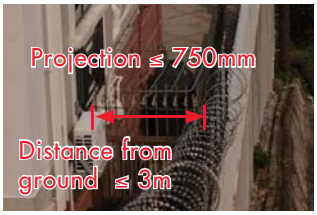

6.2 Other Areas of Concerns in Carrying Out "Designated Exempted Works"

6.2.1 "The person who arranged for the works to be carried out" should appoint a competent contractor. If in doubts, advice from the building professionals or the BA is encouraged for ensuring that the works to be carried out are really DEW.

6.2.2 Any contractor who is appointed to carry out DEW should confirm that all prescribed conditions for the item are satisfactorily fulfilled. For example, if he is appointed to erect a metal gate at a fence wall or an entrance of a building, his design of the metal gate should not be higher than 2.2m. The weight and width of each leaf should not exceed 100kg and 1.2m respectively. The works should not cause any additional load to cantilevered slab and structural alteration.

6.2.3 The contractors should ensure that the DEW to be carried out will not contravene any regulation, i.e. the works should comply with the building standards stipulated in the regulations and related codes of practice. Should any contravention be identified, an order made under section 24 of the BO may be served requiring the demolition or alteration of such building works to put an end to the contravention or to make the works complying with the regulations. The nature of DEW is close to "minor works" except that they are smaller in scale. The contractors are thus recommended to read the relevant "Practice Notes for Registered Contractors" on similar minor works item, their recommended design and details at the appendix and the summary of legislative concerns in Chapter 10 of these guidelines for reference.

6.2.4 Although it is not required to obtain approval before the carrying out of the DEW, contractors are always reminded to observe the good practices of checking the approved building records on the internet through the BRAVO system (http://bravo.bd.gov.hk) or from the "Building Information Centre" ("BIC") of the Buildings Department before the commencement of works. Adequate safety and precautionary measures (detailed in Chapter 11) should always be provided by the contractors to protect themselves, the public and avoid any possible damages to the properties.

7 Inspection and Certification of "Prescribed Building or Building Works" (commonly known as "Household Minor Works Validation Scheme")

7.1 The Scheme

7.1.1 Before the introduction of the "minor works control system" ("MWCS"), lots of structures for amenities had been built without the approval of the Building Authority ("BA"). The new "validation scheme" ("VS or the Scheme") aims to rationalize unauthorized minor structures or installations that are of practical use, including supporting frames or structures for air-conditioners, drying racks and small canopies, erected before the full implementation of the MWCS on 31 December 2010.

7.1.2 Structures that can be validated under the Scheme are called the "prescribed building or building works" (or "PB/BW") with their requirements specified in Schedule 3 of the Building (Minor Works) Regulation ("B(MW)R or the Regulation").

7.1.3 There are 4 items of "prescribed building or building works".

Item	The prescribed building or building works	
1.	Unauthorized supporting structure for an air-conditioning unit, water cooling tower or any associated air duct • On-grade or on a slab (not cantilevered) • Weight of the cooling plant ≤ 100kg	
2.	Unauthorized metal supporting frame for an air-conditioning unit or any associated duct • Projection ≤ 600mm • Weight of the cooling plant ≤ 100kg • No projection over street or common part of building if the highest point of frame ≤ 3m from ground	
3.	Unauthorized drying rack • Projection ≤ 750mm • No projection over street or common part of building if the highest point of rack ≤ 3m from ground	

Item	The prescribed building or building works
4.	Unauthorized canopy • Projection ≤ 500mm • No concrete • No projection over street or common part of building if the highest point of canopy ≤ 3m from ground

7.1.4 According to section 39C of the Buildings Ordinance ("BO"), enforcement action by the issue of a removal order under section 24 or a warning notice under section 24C of the BO will not be taken by the BA against the validated building or building works on the ground that they have been completed or carried out without prior approval and consent. Notwithstanding, the status of the validated building or building works is still unauthorized building works.

7.1.5 The insurance industry is positive to offer insurance coverage for those unauthorized structures validated under the MWCS as long as their safety condition is maintained.

7.2 Statutory Procedures for Validation and Associated Strengthening

7.2.1 Any person who has any of the above four PB/BW existed before the full implementation of the MWCS on 31 December 2010 and wishes to arrange for validation, an appointed person is required to be appointed under section 39C(2) of the BO to certify on inspection that the existing unauthorized structures meet the safety requirements. According to section 62(2) of the B(MW)R, the appointed person should be one of the following person:

The Appointed Person for Inspection	**An AP, A RSE, A RGBC**
	A RMWC (Co) registered for **Type A** minor works (i.e. addition & alteration works) or **Type E** minor works (i.e. works relating to structures for amenities)
	A RMWC (Ind) registered for items 3.25, 3.27, 3.28, 3.29, 3.34, 3.35, 3.36, 3.37 & 3.38

7.2.2 Section 62(3) of the Regulation prescribes the procedures for validation. The appointed person may consider necessary for the purpose of safety or dimensional requirements to carry out "minor works" to alter or strengthen the existing structures. Such alterations or strengthening works are designated as "minor works" which have to be carried out by a PRC under the simplified requirements.

7.2.3 In case if the appointed person find on inspection that the building or building works is not PB/BW or it is PB/BW but in such a state that cannot be altered and/or strengthen for validation, he should respectively advise "the person who arranged for the building or buildings works to be validated" at once that the VS is not applicable or the works cannot be validated.

7.2.4 Acceptance of the validation and any associated strengthening works is subject to the submission of a certification report to the BA in prescribed manner within 14 days after the completion of the inspection or completion of the alteration or strengthening works (if applicable).

7.2.5 The BA will conduct audit checks upon receipt of the above notice to ascertain compliance with the statutory requirements and ensure the safety standard of such PB/BW. The appointed person will be notified of any irregularity found. Disciplinary and prosecution actions may be taken against cases of non-compliance.

7.2.6 The procedures for validation together with any associated strengthening works are illustrated in the following chart.

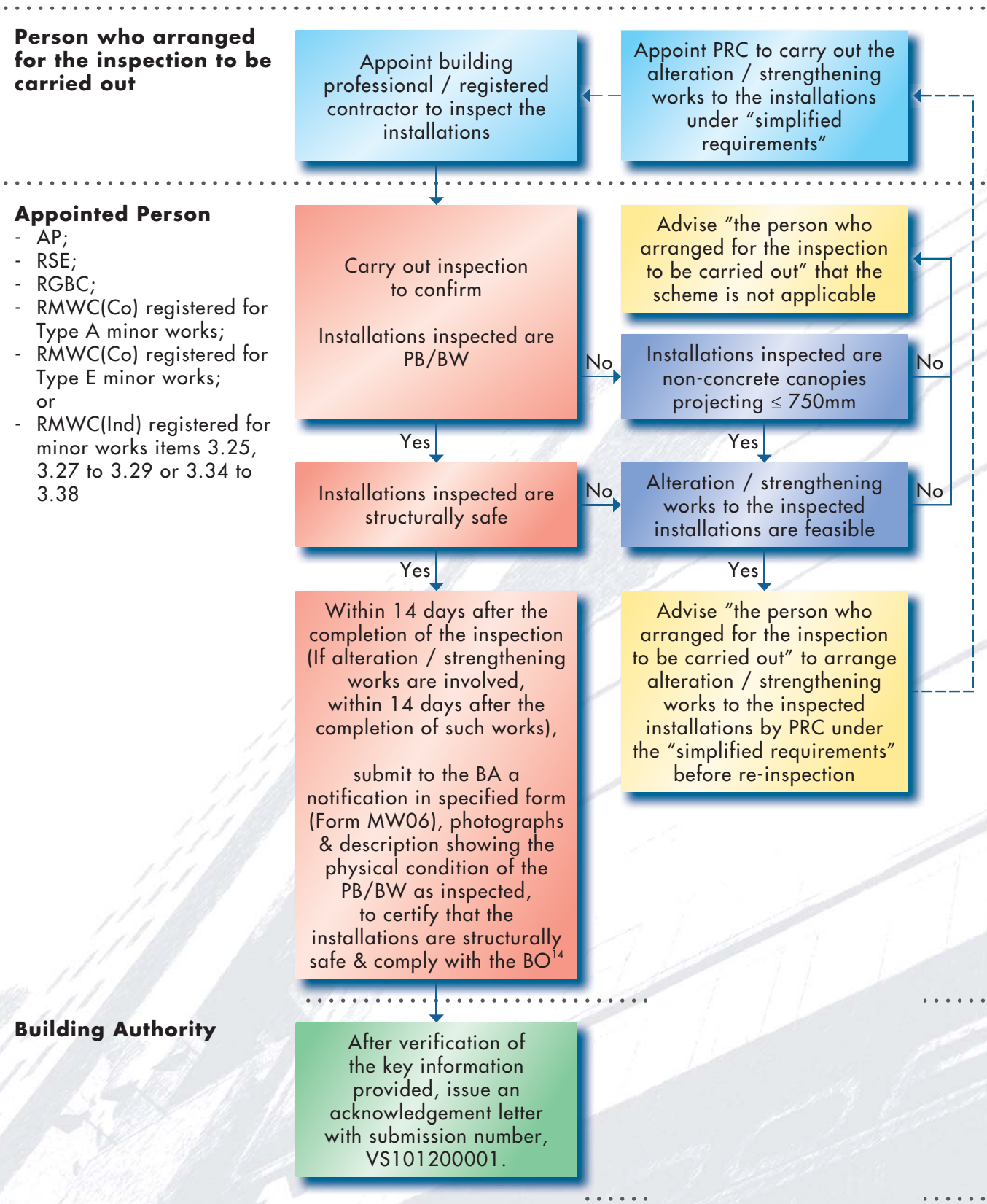

14. Except BO s.14(1) & Building (Administration) Regulation 25.

8 Legal Obligations of "Prescribed Registered Contractors"

8.1 Duty to Comply with the Ordinance and Regulations

8.1.1 No matter the "minor works" are carried out with approval and consent or under the "simplified requirements", the "prescribed registered contractor" ("PRC") is required under sections 9AA(4)(c) and 9AA(6)(c) of the Buildings Ordinance ("BO or the Ordinance") to comply generally with the Ordinance.

8.1.2 Sections 9AA(4)(b) and 9AA(6)(b) of the BO stipulate that if the proposed "minor works" would result in any contravention of the regulations, for example, regulation 7(3) of the Building (Planning) Regulations (Cap. 123F) by having the proposed drying rack projected more than 750mm from the external wall or at a distance of less than 2.5m from the ground, the PRC should not carry out the works but to advise "the person who arranged for the works to be carried out" and/or the "prescribed building professional" ("PBP").

8.2 Duty to Supervise

8.2.1 A PRC who is appointed to carry out "minor works" with approval and consent or under the "simplified requirements" is required respectively under sections 9AA(4)(a) and 9AA(6)(a) of the BO to provide continuous supervision to the carrying out of the works.

8.2.2 Section 43 of the Builidng (Minor Works) Regulation ("B(MW)R or the Regulation") further requires that the duty to supervise applies to all PRC except "Registered Minor Works Contractor (Individual)" ["RMWC(Ind)"].

8.2.3 The purpose of supervision is to ensure that the works are carried out in accordance with the Ordinance and any order made or condition imposed by the Building Authority ("BA").

8.2.4 For Class I or Class II minor works, continuous supervision also serves the purpose to ensure that the works carried out do not diverge or deviate materially from the prescribed plan and details submitted to the BA before the commencement of works.

8.3 Duty to Carry Out Class III Minor Works Personally

8.3.1 According to section 44 of the B(MW)R, a RMWC(Ind) is required to carry out the Class III minor works personally.

8.3.2 RMWC(Ind) is also required to ensure that his works are carried out in accordance with the Ordinance and any order made or condition imposed by the BA.

8.4 Duty to Appoint Appropriate "Technically Competent Persons" for Class I Minor Works

8.4.1 If the submission of a supervision plan (refer to paragraph 4.2.8(d) above) is affirmative for the proposed Class I minor works, the PRC or PBP is required under section 45(1) of the B(MW)R to appoint an appropriate number of "technically competent persons" ("TCP") to supervise the carrying out of the works.

8.4.2 The appointment should be made known to the BA at the time of notification for commencement via the submission of a supervision plan with all particulars, qualifications and experience of the TCP provided in details.

8.4.3 If there is any change in the appointment of TCP, the PRC or PBP who made the appointment is required under section 45(2) of the Regulation to notify the BA in writing within 7 days of the change.

8.4.4 If the appointment of any TCP is terminated or the proposed TCP is rejected by the BA, the PRC should not commence or should cease the carrying out of the related part of the "minor works" until another TCP is in place according to section 47 of the Regulation.

8.5 Duty on Change / Cessation of Appointment

8.5.1 If a PRC is ceased to be appointed, the contractor is required under section 51 of the B(MW)R to deliver within 7 days of the cessation a notice in the specified form (Form MW10) to the AP or direct to the BA respectively for any Class I or Class II minor works regarding the cessation and certify that his works have been carried out in accordance with the Ordinance. Under section 52 of the Regulation, the AP should submit such notice to the BA within 7 days after the receipt of such notice from the contractor.

8.5.2 If a PRC is appointed to take over any Class II minors works of a previous contractor, the new contractor is required to submit a notification in the specified form (Form MW07) to the BA within 7 days of the appointment under section 48(4) of the Regulation.

8.6 Duty to Cease Works without PBP

If the PBP is unable to act or ceased to be appointed during the course of any Class I minor works and there is no replacement for his place, the PRC has a duty under section 53(1) of the B(MW)R to cease the carrying out of works until another PBP is appointed in place.

8.7 Duty to Provide Information to the BA

The PRC who has prepared any plans or documents for submission to the BA is required under section 56 of the B(MW)R to provide information of the works when being requested.

8.8 Duty to Keep Record

8.8.1 Apart from the RMWC(Ind), all PRC should keep records of activities and information relating to the supervision of the works according to section 43 of the B(MW)R. The records and information shall be retained for at least 12 months after the completion of the works.

8.8.2 According to section 57 of the Regulation, the PRC for Classes I or II minor works has to keep copies of all submission on site during the course of works. They include the prescribed plans and details and all supervision plans (if any). Copies of such document should be produced upon the request of BA.

8.9 Duties for Carrying Out Minor Works with Approval and Consent

The Building (Administration) Regulations provide for duties on supervision, notification, certification and record keeping for the PRC not carrying out "minor works" under the "simplified requirements".

8.10 Duties to Comply with the Ordinance and Supervise when Carrying Out DEW and EBW

The PRC shall bear similar obligations when they are appointed to carry out the "exempted building works" and "designated exempted works" as mentioned in paragraphs 5.5 and 6.2 above.

9 Sanctions of "Prescribed Registered Contractors"

9.1 Offences on Contravention of the "Simplified Requirements"

Under section 58 of the B(MW)R, any person [including the "prescribed registered contractor" ("PRC")] who without reasonable excuses contravenes the "simplified requirements" is liable on conviction to a fine at level 5 ($50,000 at present).

9.2 Offences on Failure to Notify the BA of any Contravention

If the PRC fails to notify the Building Authority ("BA") of any contravention resulting from the works, he will be liable on conviction to a fine at level 5 ($50,000 at present) under section 40(2AAAA) of the Buildings Ordinance ("BO or the Ordinance").

9.3 Offences on Undertaking any Unregistered Class, Type or Item of "Minor Works"

Under section 40(2E) of the BO, if a RMWC or RSC certifies or carries out "minor works" not belonging to the class, type or item for which he is registered, he will be liable on conviction to a fine at level 6 ($100,000 at present) and to imprisonment for 6 months; and a fine of $5,000 for each day during which it is proved to the satisfaction of the court that the offence has continued.

9.4 Offences on Causing Injury to Person or Damage to Property

The PRC shall commit an offence under section 40(2B) of the BO if there is or likely to have injury or damage caused by his works. The maximum penalty for such "minor works", on conviction, is a fine of $500,000 and imprisonment of 18 months.

9.5 Offences on Employment of Illegal Immigrants

Under section 17I of the Immigration Ordinance (Cap. 115), the employer of any employee who is not lawfully employable is liable on conviction to a fine of $350,000 and to imprisonment for 3 years.

9.6 Offences in relation to Unregistered Construction Workers

Under section 6 of the Construction Workers Registration Ordinance (Cap. 583), any unregistered construction worker personally carries out construction work on a construction site or the employer of such unregistered worker is liable on conviction to a fine at level 3 ($10,000 at present) and level 5 ($50,000 at present) respectively.

9.7 Disciplinary Proceedings

9.7.1 Under section 13(2) of the BO, the PRC may be subject to disciplinary proceedings if he has:

(a) been negligent or misconducted himself;
(b) deviated in a material manner from a supervision plan;
(c) drawn up a supervision plan that does not comply with the material requirements of the Ordinance;
(d) certified "minor works" that have been carried out in contravention of the Ordinance;
(e) supervised "minor works" that have been carried out / carried out minor works in such a manner that they have caused injury to a person; or
(f) carried out building works (other than "minor works") under the "simplified requirements" / certified building works (other than "minor works") as if it were "minor works" commenced under the "simplified requirements".

9.7.2 The disciplinary proceedings can bring about suspension or removal from the register, a fine or a reprimand.

10 Other Legislations

10.1 Allied Regulations of the Buildings Ordinance

10.1.1 Note should be taken of the requirements or restrictions provided under the allied regulations of the Buildings Ordinance ("BO") and the related codes of practice ("CoP"), design manuals, practice notes [i.e. "Practice Notes for AP, RSE & RGE" ("PNAP"), "Practice Notes for Registered Contractors" ("PNRC")] and guidelines when carrying out the minor works, especially for Class II and Class III minor works which do not have the involvement of an AP.

10.1.2 For instance, regulation 3 of the Building (Construction) Regulations & PNAP APP-53 should be complied with for using the material of acceptable performance requirements / standards / technical criteria. The "Certificate of Accepted Building Materials and Products for Minor Works" and "Schedule of Building Materials and Products for Minor Works" (e.g. in relation to the use of fire resisting products, glazing barrier, cast iron pipes and fittings) should be submitted in accordance with PNAP APP-13 and PNRC 25.

10.1.3 Other requirements and considerations for the carrying out of each item of minor works are provided in Chapter 3 for reference. Apart from the requirements or restrictions provided under the BO, there are further provisions in other legislation.

10.2 New Territories Exempted Houses

The "minor works control system" does not apply to any building exempted under the Buildings Ordinance (Application to the New Territories) Ordinance (Cap. 121) as specified in a "certificate of exemption" (i.e. the New Territories exempted houses under the small house policy) according to section 7(1)(a) thereof. Yet any building or drainage works (including "minor works") undertaken or to be undertaken in such exempted buildings must comply in all aspects with the relevant lease conditions. Where approval and/or consents are required under the lease, submissions should be made to the appropriate District Lands Officers before commencement of works.

10.3 Town Planning

10.3.1 Most of the territory in Hong Kong is governed by various types of town plans (for example, Outline Zoning Plans ("OZP"), Development Permission Area Plans) issued by the Planning Department for controlling the use, density, viz plot ratio, site coverage, gross floor area and height of the development under the Town Planning Ordinance (Cap. 131).

10.3.2 If the "minor works" are carried out in a manner that may affect the building height, in particular, at the roof top such as the supporting structure for radio base station, special care should be attended to check against the corresponding OZP whether there is any height restriction and violation by carrying out of the "minor works".

10.4 Airport Height Restrictions

The Hong Kong Airport (Control of Obstructions) Ordinance (Cap. 301) also provides for controls of heights of buildings in the interest of the safety of aircraft.

10.5 Fire Safety

10.5.1 It should be noted that obstruction and locking of the means of escapes are offences under regulations 14 and 15 of the Fire Services (Fire Hazard Abatement) Regulation (Cap. 95F). When installing metal gates at the entrance of a building at which is the exit of the means of escape:

(a) any locking device proposed should be readily opened from the inside without the use of a key at all times; and

(b) if an electric locking device is installed, the device shall be released automatically upon power failure and be fitted with a power on / off switch for testing.

10.5.2 If the "minor works" to be carried out may affect the fire services installations, for example, formation of slab opening, the contractor is advised to check the "Code of Practice for Minimum Fire Service Installations and Equipment" and arrange for the necessary alteration works by a registered Fire Service Installation Contractor.

10.6 Environmental Protection

10.6.1 Sections 6-8 and 8A of the Noise Control Ordinance (Cap. 400) control construction noise from the use of powered mechanical equipment; and the carrying out of certain noisy works in designated areas, between 7 p.m. and 7 a.m. and on general holidays, by Construction Noise Permits. Certain equipment is also subject to restrictions when its use is allowed. Hand-held percussive breakers and air compressors must comply with noise emissions standards and be issued with a noise emission label from the Environmental Protection Department ("EPD"). Contractors may check the "Code of Practice on Good Management Practice to Prevent Violation of the Noise Control Ordinance (Chapter 400) (for Construction Industry)" for guidelines recommended by the EPD.

10.6.2 Sections 16 and 16A of the Waste Disposal Ordinance (Cap. 354) provide for the control on illegal dumping of waste. It is prohibited to dump waste in public places or on Government land, or on private premises without the consent of the owner or occupier. Contractors should arrange for proper disposal of construction waste at the prescribed facilities as provided in regulation 3 of the Waste Disposal (Charges for Disposal of Construction Waste) Regulation (Cap. 354N).

10.6.3 Similar provision of construction waste management is recommended by the Buildings Department ("BD") in the practice note PNAP ADV-19 "Construction and Demolition Waste".

10.6.4 Asbestos control provisions in Part IX of the Air Pollution Control Ordinance (Cap. 311) require that building works involving asbestos must be conducted only by registered qualified personnel and under the supervision of a registered consultant. Contractors may make reference to the following statutory environmental standards and guidelines published by the EPD:

(a) "Code of Practice on Asbestos Control - Asbestos Work Using Full Containment or Mini Containment Method";
(b) "Code of Practice on Asbestos Control - Asbestos Work Using Glove bag Method";
(c) "Code of Practice on Asbestos Control - Preparation of Asbestos Investigation Report, Asbestos Management Plan and Asbestos Abatement Plan";
(d) "Code of Practice on Asbestos Control - Safe Handling of Low Risk Asbestos Containing Material"; and
(e) "Code of Practice on the Handling, Transportation and Disposal of Asbestos Waste".

10.6.5 Dust mitigation measures complying with the Schedule of the Air Pollution Control (Construction Dust) Regulations (Cap. 311R) should be adopted to minimize the dust emission.

10.6.6 Legal controls also apply to sewerage connections by means of the Water Pollution Control Ordinance (Cap. 358).

10.7 Heritage Conservation

10.7.1 Section 6 of the Antiquities and Monuments Ordinance (Cap. 53) ("AMO") restricts the carrying out of building works in a declared monument or proposed monument.

10.7.2 Buildings of heritage value may be accorded with grading. Although the graded buildings are not under statutory protection under the AMO, demolition works or building works such as alteration or renovation which may affect their heritage value are not encouraged by the Secretary for Development.

10.8 Construction Workers Registration

10.8.1 Under the Construction Workers Registration Ordinance (Cap. 583) ("CWRO"), the works described in Part 1 of Schedule 1 to the Ordinance may only be carried out by registered skilled workers for the relevant designated trades, or by registered construction workers under the instruction and supervision of such registered skilled workers. Practitioners are required to register as "general workers" under the CWRO for carrying out "minor works". When the remaining phase of prohibition under the CWRO is put into force, registration of "skilled workers" according to their specific areas of expertise would be required.

10.8.2 Examples of "minor works" that are designated in Part 1 as mentioned above and have to be carried out by or under instruction and supervision of a registered skilled worker are:

(a) asbestos abatement
(b) concrete repair
(c) curtain wall installation
(d) demolition
(e) mechanical excavation
(f) structural steel welding

10.8.3 It should be noted that the contractors or workers involved in such "minor works", which are building works under the BO, are still controlled by the CWRO irrespective of the introduction of the minor works control system.

10.9 Construction Site Safety

10.9.1 Under section 6BA of the Factories and Industrial Undertaking Ordinance (Cap. 59), workers should receive recognized safety training and hold a valid certificate (generally known as "Green Card") before they can be employed to carry out the "minor works".

10.9.2 Contractors are also required under regulation 38A or 38AA of the Construction Sites (Safety) Regulations (Cap. 59I) ("CS(S)R") to ensure safety of the construction site, especially when working at height and providing access to and egress from the work place.

10.9.3 Similar provision of precautionary measures is specified by the BD in the practice note PNAP APP-107 "Precautionary Measures for Construction Sites".

10.9.4 For "minor works" to be carried out at a height of not less than 2m, adequate steps such as working platform should be provided for prevention of falls according to regulation 38B of the CS(S)R.

10.9.5 When excavation associated with "minor works" such as item 1.12 is carried out, fencing should be provided according to regulation 40 of the CS(S)R for prevention of falls into the trench or down from more than 2m.

10.10 Prevention of Bribery

Soliciting or accepting bribes and presents in any form for undertaking the "minor works" is forbidden under Prevention of Bribery Ordinance (Cap. 201).

11 Precautionary & Safety Measures

11.1 Record Checking

11.1.1 The contractors are recommended to check the approved building records (such as the building plans, structural plans, calculations and etc.) from the Buildings Department ("BD") before the commencement of works.

11.1.2 This is important especially when the works are required to be carried out in accordance with the original design such as:

(a) repair of structural elements (minor works item 1.17);
(b) repair of slab or beam (minor works item 2.17);
(c) reinstatement of slab opening (minor works items 1.35 & 2.35);
(d) replacement of GRP water tank (minor works item 2.3); and
(e) repair or replacement of protective barrier (minor works items 2.5 & 3.3).

11.1.3 The "Building Information Centre[15]" ("BIC") of the BD provides inspection and copying services of the latest approved plans, including building, structural & drainage plans etc. and related documents, such as occupation permit (hereafter called "building records") of existing completed private buildings[16] in Hong Kong. Members of the public may apply for inspection or issue of copies of these building records by submitting the application forms and paying the prescribed fees. Applications can be submitted by:

(a) attending the BIC in person [operates on Monday to Friday at 9:00 am to 5:00 pm (walk-in cases will be cut off at 4:00 pm)] – on average, it takes 1.5 hours for the applicant to complete the application procedure and inspecting the building records and another 1.5 hours for issue of the required copies; or
(b) gaining access to BD's "Building Records Access and Viewing On-line" ("BRAVO") system over the internet (http://bravo.bd.gov.hk) for on-line application.

BRAVO 百樓圖網

Detailed information for inspection and copying of plans and documents may refer to PNAP APP-39 or the BD's pamphlet on "Building Information Services" at http://www.bd.gov.hk/english/documents/pamphlet/BIC_e.pdf.

11.1.4 The contractor may also approach the AP, RSE and/or RGE of the subject building structure or building works for obtaining the information of its original design before carrying out the works.

15. The "Building Information Centre" is located at 13/F, Pioneer Centre, 750 Nathan Road, Mongkok, Kowloon.

16. Excluding exempted houses in the New Territories and previous Housing Authority buildings sold or disposed of to the private sector such as home ownership scheme buildings, tenants purchase scheme buildings and Link properties.

11.2 Precautionary and Protective Measures

11.2.1 All precautionary and protective measures should be completed before the commencement of works.

11.2.2 Scaffolding is the most commonly used measure for providing:

(a) a temporary accessible platform for working at height; and
(b) a physical separation of the works areas from the surroundings.

11.2.3 The design, construction, maintenance and dismantling of scaffold should strictly comply with regulations 2 and 38D of the Construction Sites (Safety) Regulations ("CS(S)R"), the "Code of Practice for Bamboo Scaffolding Safety" and where applicable, the "Code of Practice for Metal Scaffolding Safety" issued by the Labour Department ("LD"). The scaffold including the working platform, gangway, run, associated ladder or step-ladder together with guard-rail, toe-board or other safeguards and all fixings should be of suitable and sound materials of sufficient strength and capacity for the purpose for which it is to be used. Working platforms in which should not be less than 400mm wide and be protected by guard-rails, fitted with toe-boards of a minimum height of 200mm and closely planked complying with Schedule 3 of the CS(S)R.

11.2.4 "Guidelines on the Design and Construction of Bamboo Scaffolds" and a pamphlet "Make Sure Bamboo Scaffolds are Safe Against Strong Winds" have also been published by the BD as reference.

11.2.5 Below are some of the typical examples of bamboo scaffolds for reference.

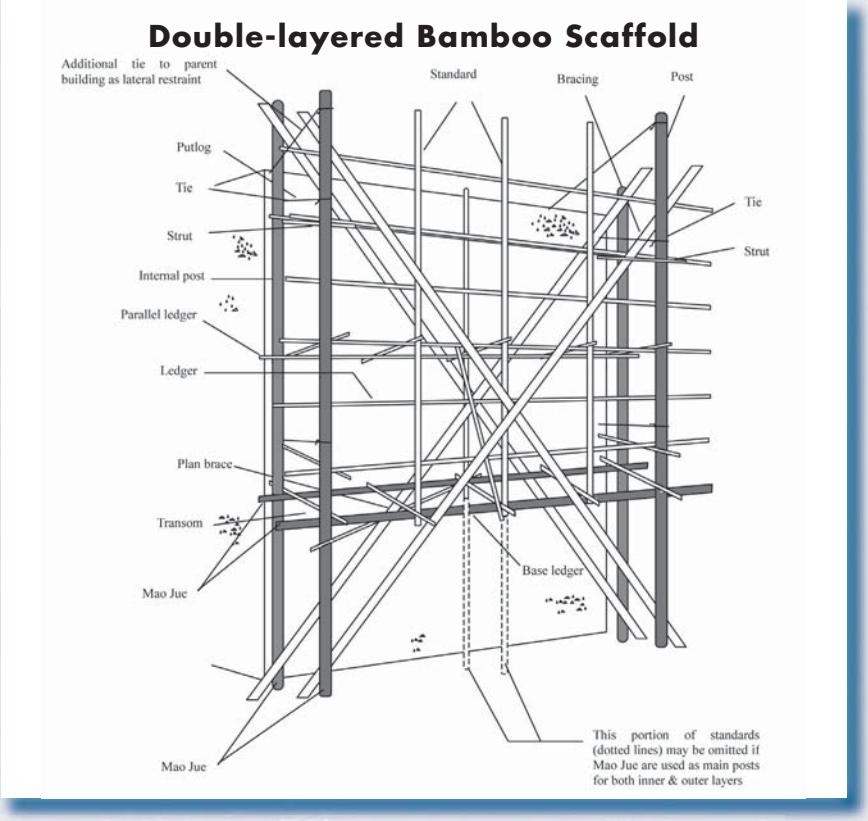

Truss-out Bamboo Scaffold (Flying Scaffold)

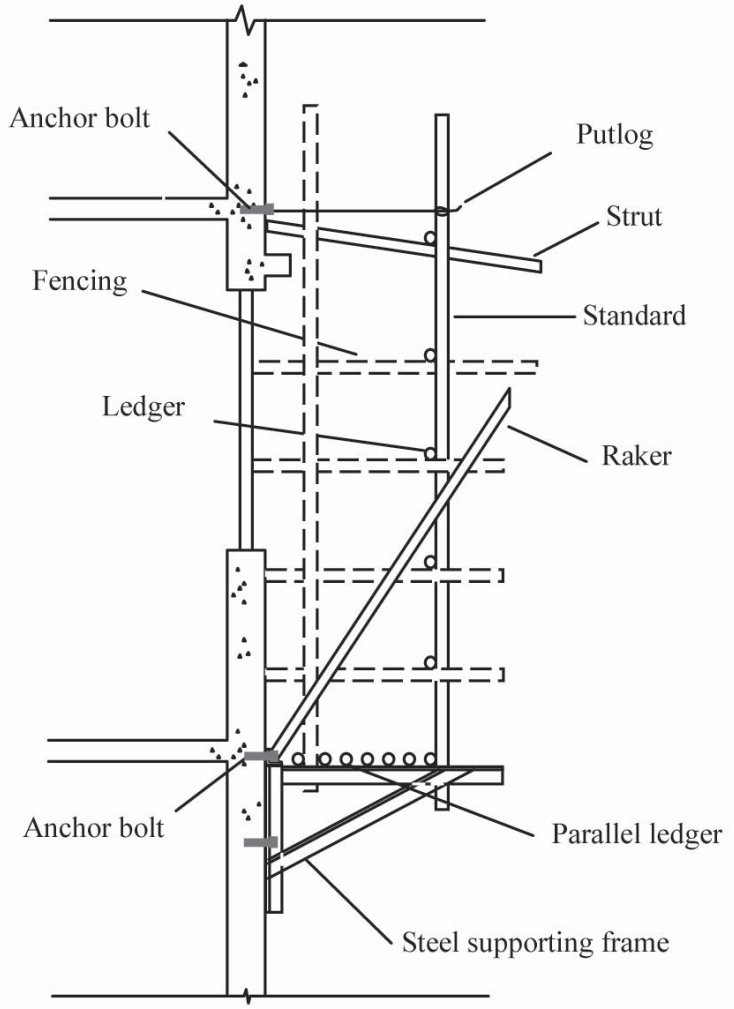

11.2.6 According to regulation 38F of the CS(S)R, inspection of the scaffold by a competent person should be arranged:

(a) before their use for the first time;
(b) after any substantial addition, partial dismantling or other alteration;
(c) after any exposure to weather that is likely to affect their strength or stability; and
(d) at regular intervals of not more than 14 days immediately preceding each use of the scaffold.

11.2.7 Covered walkway should be provided for areas with passage unless the affected areas had been properly fenced. Other appropriate measures such as dust screen and catch fan should be provided when considered necessary and compatible to the nature of works.

11.2.8 The contractor should check and inform the building management or owners of the proposed works and seek their advices or consent before the commencement of any works on site. If the proposed minor works is located at the common part of a building, the contractor should give advance notice to the affected occupants.

11.3 Personal Protective Equipment

11.3.1 The contractor should provide adequate and suitable personal protective equipment for each worker carrying out "minor works" on site, for example, safety helmet, safety shoes or boots, safety belt or harness, gloves, eye protector, ear protector, respiratory protective equipment, and etc., as required.

11.3.2 Reference is recommended to the following publications of LD on their usage:

(a) "Guidance Notes on Classification and Use of Safety Belts and their Anchorage Systems";
(b) "Guidance Notes on the Selection, Use and Maintenance of Safety Helmets"; and
(c) "Safety at Work: A Guide to Personal Protective Equipment".

11.4 Fire Safety Measures

11.4.1 Measures should be taken to minimize any fire hazard to the building where the works take place.

11.4.2 It is important to make sure before the works that the existing fire services installations are in good working order. The means of escape are freely accessible without obstruction. All fire resisting doors to the staircase are kept closed. In case of any works to the lift shaft, their openings should be sealed with fire resisting material to prevent the spread of smoke and fire.

11.4.3 Safe use and storage of inflammable substance should be noted.

11.5 Electric Safety Measures

Reference to the "Guidance Notes for the Safe Isolation of Electricity Source at Work" issued by the LD is recommended.

11.6 Gas Safety Measures

11.6.1 Care should be taken of concealed gas pipes in the carrying out of renovation and repair works in existing buildings.

11.6.2 The Gas Authority and HK & China Gas Co. Ltd. have issued the following documents for reference by the trade:

(a) "Code of Practice : Avoiding Danger from Gas Pipes" issued by the Electrical and Mechanical Services Department; and
(b) "Operating Procedures – Services : Installation of Low Pressure Installation Pipes" issued by HK & China Gas Co. Ltd.

11.7 Other Recommended Measures or Guidance

11.7.1 In case of works involving the asbestos containing material, the provision of safety measures should comply with the "Code of Practice: Safety and Health at Work with Asbestos" issued by the LD.

11.7.2 If excavator is to be used for excavation works associated with the carrying out of other "minor works", the requirements under the "Code of Practice on Safe Use of Excavators" published by LD should be met.

11.7.3 The contractor is also recommended to make reference to a guideline on "Risk Assessment for the Prevention of Heat Stroke at Work" (http://www.labour.gov.hk/eng/public/oh/HeatStress.pdf) issued by the Occupational Safety and Health Branch of LD and the "Guidelines on Site Safety Measures for Working in Hot Weather" (http://www.hkcic.org/files/eng/documents/Publications/Working_in_hot_weather.pdf) published by the Construction Industry Council.

11.7.4 The "Guidance Notes to Renovation Safety" and the "Safety Handbook for Construction Site Workers" published by the LD provide a simple check on working at height, requirements of the working platforms, electricity safety, fire safety for inflammable substances, personal protective equipment and safe operation of common tools.

12 Insurance Matters

12.1 The "prescribed registered contractor" may be required under the contract to indemnify the employer against any liability, loss, claim and damage due to the works being carried out by them. In drawing up the insurance policy, the contractor should be the primary insured and all other related parties (such as the owner, sub-contractors, etc.) should be added to the policy with clear identification of their roles as an additional insured.

12.2 Below are some common types of insurance that may be needed:

(a) a contractor's all risk insurance to cover the full value of the works;
(b) a third party liability insurance indemnifying the Insured against any bodily injury or death and damage to third party properties; and
(c) an employees' compensation insurance in accordance with the Employees' Compensation Ordinance (Cap. 282) against the claims for bodily injury to or the death of any workers employed in the works.

12.3 In respect of the public liability or third party liability insurance, the contractor is required to check with the building management / owners / occupiers / Incorporated Owners of the building to ascertain the following information prior to the arrangement of such insurance:

(a) name of parties to receive indemnity as the additional insured under the policy (i.e. Name of the building owner(s), building management, occupier(s) or Incorporated Owners of the building & etc.); and
(b) the required insured amount, for example $10 million for any one event.

12.4 Insurance policies should be ready before the commencement of "minor works" and the policies (including the receipt of premium payment) should be submitted or copied to the concerned parties for record.

13 Other Matters to Note

13.1 Common Part of a Building

When the "minor works" are to be carried out at the common part of a building, any "person who arranged for the carrying out of such works" or his appointed personnel (i.e. the "prescribed building professional" or "prescribed registered contractor") is strongly recommended to consult the co-owners, the Incorporated Owners and/or the building management (where applicable) before the commencement of works. Civil liabilities under the Deed of Mutual Covenant should be noted.

13.2 Dedicated Areas and Public Facilities

私人發展項目內
供公眾使用的設施
(包括休憩空間)

13.2.1 Some areas within some private developments are required under land leases or deeds of dedication to provide and manage various public facilities. They can broadly be categorized into: (a) Government, Institution and Community facilities such as community halls, elderly centres, etc.; (b) public open spaces; (c) pedestrian passage and vehicular access, e.g. walkways, footbridges and rights of way; (d) car parks, and (e) Public Transport Terminus.

13.2.2 No works should be proposed in or affecting the dedicated areas or public facilities. Lists of the public facilities within the private developments are available from the websites of the Development Bureau (http://www.devb-plb.gov.hk), Lands Department (http://www.landsd.gov.hk) and Buildings Department (http://www.bd.gov.hk).

14 Frequently Asked Questions

Q1: How can a contractor notify the Building Authority ("BA") the commencement or completion of "minor works"? Can he do so by phone calls on the spot or is it a must to complete paper documents for submission to the Buildings Department?

The contractor must submit the notice in the specified forms and supporting document to the BA regarding his appointment, the "minor works" to be carried out and also commencement / completion of works. This is required for record of works and also the identities of the contractors and owners.

For class III minor works, it is only required to submit a notice and certificate of completion in the specified forms with the required documents within 14 days of the date of completion of works. The contractor can also choose to submit description of works with record photos in lieu of plans and record photos.

Q2: What is the division of labour for contractors and building professionals in carrying out Class I Minor Works?

For Class I minor works, the "prescribed building professionals" ("PBP") would be responsible for the design and periodic supervision of the carrying out of works. They should prepare the prescribed plans and details showing the design and standard of the works and give a copy of such to the contractor. They should also carry out supervision to ensure that the works are in general compliance with the Buildings Ordinance ("BO") and conforming to the prescribed plans and details prepared by them.

The "prescribed registered contractor" ("PRC") would be responsible for the actual carrying out of the works and its responsible personnel, i.e. the authorized signatory would carry out continuous supervision to ensure the works are carried out in accordance with the provisions of the BO and conforming to the prescribed plans and details supplied by the PBP.

If a supervision plan is required for the Class I minor works, the PBP and PRC should appoint "technically competent persons" ("TCP") as required in the Technical Memorandum for Supervision Plans ("TM"). The mode of supervision of the TCP should follow the requirements stipulated in the TM and the Code of Practice for Site Supervision.

Q3: Why do scaffoldings not designated as "minor works"? Is there any safety control on scaffoldings?

Scaffoldings are temporary works associated with the carrying out of building works. Therefore scaffoldings associated with "minor works" would be allowed under the new "minor works control system".

Registered contractors should also observe the following statutory requirements, Codes of Practice and guidelines when carrying out minor works:

(a) structural safety and stability of scaffolds:
- Factories and Industrial Undertakings Ordinance (Cap. 59);
- Construction Sites (Safety) Regulations (Cap. 59I);
- Labour Department's "Code of Practice for Bamboo Scaffolding Safety"; and
- Buildings Department's "Guidelines on the Design and Construction of Bamboo Scaffolds".

(b) use of protective measures to prevent objects from falling outside the building with the use of scaffolding:
- Construction Sites (Safety) Regulations (Cap 59I);
- Building (Demolition Works) Regulations (Cap 123C); and
- Summary Offences Ordinance (Cap 228).

Q4: Any safety and environmental suggestions to the registered contractors who intend to carry out "minor works"?

Registered contractors are encouraged to take concerted efforts in improving the site safety performance, construction waste management and environmental protection measures by recommending the concept of "Pay for Safety Scheme" ("PFSS") and "Pay for Safety and Environment Scheme" ("PFSES") to the employer.

They are advised to incorporate under sections called "Site Safety" and "Environmental Management" some items on safety, construction wastes management, strengthening and improvement of existing environmental protection measures in their quotations, Bills of Quantities or Schedule of Rates if applicable.

Key elements and guidelines to implement the PFSS may be modeled on the "Construction Site Safety Manual" issued by the Development Bureau as posted on its website: http://www.devb.gov.hk/en/publications_and_press_releases/publications/construction_site_safety_manual/index.html, and the Factories and Industrial Undertakings (Safety Management) Regulation (Cap. 59AF). The Real Estate Developers Association of Hong Kong and the Hong Kong Construction Association have also jointly produced four safety management documents available on website: http://www.safetypartnering.com/smscd.htm, for their Safety Partnering Programme launched in June 2005 to promote private sector companies in pursuit of improved site safety performance. Interested parties may approach the associations direct for details. Adjustments to the guidelines given in the above safety documents may be made taking account of the needs of particular companies, nature of works and specific site conditions.

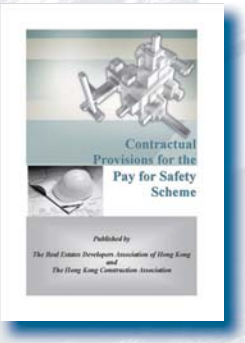

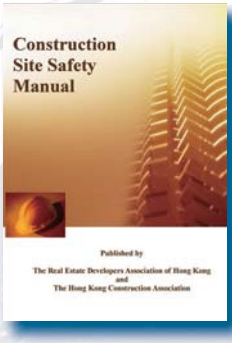

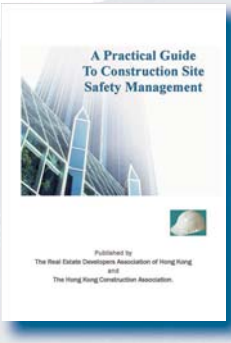

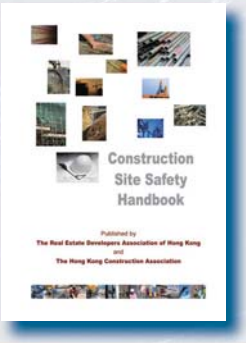

15 Enquiries

15.1 Address

Any enquiries on these Guidelines or the "minor works control system" can be directed to the "Minor Works Unit" of the Buildings Department at 12/F Pioneer Centre, 750 Nathan Road, Kowloon.

15.2 E-mail : enquiry@bd.gov.hk

Alternatively, enquiries can be sent via e-mail.

15.3 Hotline : 2626 1616

The hotline of the Buildings Department is handled by the "1823 call centre" which operates round the clock.

15.4 Technical Resource Centre

Technical Resource Centre ("TRC") is manned by staff of the Buildings Department for answering queries on "minor works". Informative material presented on display boards is also available at the Centre. The first TRC is situated in the Property Management Advisory Centre of the Hong Kong Housing Society located at:
5/F Henry G Leong Yaumatei Community Centre
60 Public Square Street,
Yau Ma Tei, Kowloon

15.5 Other Information

Information on the services offered by the Buildings Department and on the legislation can also be found on our website at http://www.bd.gov.hk.

Appendix I – Types of "Minor Works"

Class I

	Type						
Item	A	B	C	D	E	F	G
1.1							
1.2							
1.3							
1.4							
1.5							
1.6							
1.7							
1.8							
1.9							
1.10							
1.11							
1.12							
1.13							
1.14							
1.15							
1.16							
1.17							
1.18							
1.19							
1.20							
1.21							
1.22							
1.23							
1.24							
1.25							
1.26							
1.27							
1.28							
1.29							
1.30							
1.31							
1.32							
1.33							
1.34							
1.35							
1.36							
1.37							
1.38							
1.39							
1.40							

Class II

	Type						
Item	A	B	C	D	E	F	G
2.1							
2.2							
2.3							
2.4							
2.5							
2.6							
2.7							
2.8							
2.9							
2.10							
2.11							
2.12							
2.13							
2.14							
2.15							
2.16							
2.17							
2.18							
2.19							
2.20							
2.21							
2.22							
2.23							
2.24							
2.25							
2.26							
2.27							
2.28							
2.29							
2.30							
2.31							
2.32							
2.33							
2.34							
2.35							
2.36							
2.37							
2.38							
2.39							
2.40							

Class III

	Type						
Item	A	B	C	D	E	F	G
3.1							
3.2							
3.3							
3.4							
3.5							
3.6							
3.7							
3.8							
3.9							
3.10							
3.11							
3.12							
3.13							
3.14							
3.15							
3.16							
3.17							
3.18							
3.19							
3.20							
3.21							
3.22							
3.23							
3.24							
3.25							
3.26							
3.27							
3.28							
3.29							
3.30							
3.31							
3.32							
3.33							
3.34							
3.35							
3.36							
3.37							
3.38							

Appendix II – Items of "Minor Works"

Item	Description of building works
1.1	Erection or alteration of any internal staircase that is not used as a means of escape or a means of access for firefighting and rescue, provided that – (a) the works do not result in any additional load to any cantilevered slab; and (b) the works do not involve the alteration of any other structural elements, except a simply supported beam that – (i) is not of pre-stressed construction; and (ii) is not used to support any column, flat slab or ribbed beam.
1.2	Formation of any opening in a slab, provided that – (a) the works do not result in any additional load to any cantilevered slab; (b) the works do not involve the alteration of any other structural elements, except a simply supported beam that – (i) is not of pre-stressed construction; and (ii) is not used to support any column, flat slab or ribbed beam; and (c) the area of the opening is more than 1 m^2 but not more than 4.5 m^2.
1.3	Building works associated with the installation or alteration of any service lift, provided that – (a) the works do not result in any additional load to any cantilevered slab; (b) the works do not involve the alteration of any other structural elements, except a simply supported beam that – (i) is not of pre-stressed construction; and (ii) is not used to support any column, flat slab or ribbed beam; (c) the rated load of the lift is not more than 250 kg; (d) the internal floor area of the lift car is not more than 1 m^2; and (e) the internal height of the lift car is not more than 1.2 m.
1.4	Building works associated with the installation or alteration of any stairlift or lifting platform, provided that – (a) the works do not result in any additional load to any cantilevered slab; and (b) the works do not involve the alteratio of any other structural elements, except a simply supported beam that – (i) is not of pre-stressed construction; and (ii) is not used to support any column, flat slab or ribbed beam.
1.5	Removal of any supporting structure for an air-conditioning unit, water cooling tower, solar water heating system or photovoltaic system located on a cantilevered slab with a span of more than 1 m.
1.6	Alteration or removal of any protective barrier (other than an external reinforced concrete wall or block wall), provided that the works do not result in any additional load to any cantilevered slab.
1.7	Erection or alteration of any solid fence wall, provided that – (a) the wall is erected on-grade; and (b) the height of the wall is more than 1.5 m but not more than 5 m.
1.8	Erection or alteration of any external mesh fence, provided that – (a) the fence is erected on-grade; and (b) the height of the fence is more than 3 m but not more than 10 m.
1.9	Removal of any solid fence wall, provided that – (a) the wall is erected on-grade; and (b) the height of the wall is more than 3 m.
1.10	Removal of any external mesh fence, provided that – (a) the fence is erected on-grade; and (b) the height of the fence is more than 5 m.

Item	Description of building works
1.11	Construction or alteration of any spread footing associated with the carrying out of any other minor works or designated exempted works, provided that – (a) the works involve an excavation of a depth of not more than 3 m; (b) the overall gradient of the area bounded by lines 10 m away from the location of the footing in the downhill direction is not more than 15 degrees; (c) there is no slope steeper than 15 degrees within the area mentioned in paragraph (b); (d) there is no retaining wall or terrace wall higher than 1.5 m, or below a line drawn down from the base of the footing that is 45 degrees to the horizontal, within the area mentioned in paragraph (b); (e) the allowable pressure imposed by the footing on the ground is not more than 100 kPa or (if the footing is located below the ground water level) 50 kPa; (f) the footing is not founded on soft clay or mud; (g) the works do not involve any excavation within area number 1 or 3 of the scheduled areas; and (h) the works do not fall within the description of item 2.10.
1.12	Excavation works associated with the carrying out of any other minor works or designated exempted works, provided that – (a) the works are not carried out within area number 1 or 3 of the scheduled areas; and (b) the depth of the excavation is more than 1.5 m but not more than 3 m.
1.13	Erection or alteration of any supporting structure for an antenna or transceiver on the roof of a building, provided that – (a) the works do not result in any additional load to any cantilevered slab; (b) no part of the structure projects beyond the external wall of the building; and (c) the structure is designed for an antenna or transceiver of more than 150 kg in weight.
1.14	Erection or alteration of any supporting structure for a radio base station solely for telecommunications services in the form of an equipment cabinet on the roof of a building, provided that – (a) the works do not result in any additional load to any cantilevered slab; (b) the length of the cabinet is not more than 1.5 m; (c) the width of the cabinet is not more than 1 m; and (d) the height of the cabinet is not more than 2.3 m.
1.15	Erection, alteration or removal of any external reinforced concrete wall (other than a load bearing wall) of a building, provided that – (a) the works do not result in any additional load to any cantilevered slab; (b) the works do not involve the alteration of any other structural elements; and (c) the height of the wall is more than 1.1 m but not more than 3.5 m.
1.16	Erection, alteration or repair of any metal gate at a fence wall or at an entrance to a building, provided that – (a) the works do not result in any additional load to any cantilevered slab; (b) the works do not involve the alteration of any other structural elements; (c) the weight of at least one leaf of the gate is more than 300 kg; and (d) the height of the gate is not more than 3.2 m.
1.17	Repair of any structural elements (including any column, shear wall, flat slab, cantilevered slab, ribbed slab, waffle slab, pre-stressed beam, post-tensioned beam, cantilevered beam, transfer plate, transfer beam or earth retaining structure) in accordance with the original design, provided that the works do not result in any additional load to any cantilevered slab.

Item	Description of building works
1.18	Erection or alteration of any supporting structure for a solar water heating system on-grade or on a slab (other than a cantilevered slab), provided that – (a) the height of the structure is not more than 1.5 m; (b) the structure is designed for a solar water heating system at least one thermal collector of which is more than 200 kg in weight; and (c) if the thermal collector and the water tank of the system are integrated, the structure is designed for a system the gross weight (when the water tank is in full capacity) of which is more than 100 kg per m^2 of the ground or slab area.
1.19	Erection or alteration of any supporting structure for a photovoltaic system on-grade or on a slab (other than a cantilevered slab), provided that – (a) the height of the structure is not more than 1.5 m; and (b) the structure is designed for a photovoltaic system at least one module of which is more than 200 kg in weight.
1.20	Erection or alteration of any projecting signboard, provided that – (a) the signboard does not consist of stone; (b) the works do not result in any additional load to any cantilevered slab; (c) the works do not involve the alteration of any other structural elements; (d) the display area of the signboard is more than 10m^2 but not more than 20 m^2; (e) no part of the signboard projects more than 4.2 m from the external wall to which it is fixed; and (f) the thickness of the signboard is not more than 600 mm.
1.21	Erection or alteration of any signboard on the roof of a building, provided that – (a) the signboard does not consist of stone; (b) the works do not result in any additional load to any cantilevered slab; (c) the works do not involve the alteration of any other structural elements; (d) the display area of the signboard is not more than 20 m^2; (e) no part of the signboard projects beyond the external wall of the building; (f) the thickness of the signboard is not more than 600 mm; and (g) the distance between any part of the signboard and the level of the roof is not more than 6 m.
1.22	Erection or alteration of any wall signboard, provided that – (a) the works do not result in any additional load to any cantilevered slab; (b) the works do not involve the alteration of any other structural elements; (c) if the signboard comprises a display system consisting of light emitting diodes, the display area of the signboard is more than 5 m^2 but not more than 20 m^2; (d) if the signboard does not comprise any display system consisting of light emitting diodes, the display area of the signboard is more than 10 m^2 but not more than 40 m^2; and (e) if the distance between any part of the signboard and the ground is more than 6 m, the signboard does not consist of stone.
1.23	Erection or alteration of any outdoor signboard fixed on-grade (other than the construction of a spread footing), provided that – (a) the display area of the signboard is not more than 20 m^2; (b) the thickness of the signboard is not more than 600 mm; (c) the distance between any part of the signboard and the ground is not more than 6 m; and (d) the works do not fall within the description of item 2.21.
1.24	Removal of any signboard (other than the removal of the spread footing of any outdoor signboard), provided that the works do not fall within the description of item 11 of Part 2 of Schedule 2 or item 2.24, 2.25, 2.26, 2.27, 3.16, 3.17, 3.18, 3.19, 3.20, 3.21 or 3.22.

Item	Description of building works
1.25	Repair of any underground drain, provided that – (a) the works involve an excavation of a depth of more than 1.5 m but not more than 3 m; (b) the distance between any point of the excavation and any structure or building is at least equal to the depth of the excavation; (c) the works do not involve any excavation within area number 1 or 3 of the scheduled areas; (d) the works do not involve the last manhole; (e) if the works are carried out beside the crest of a slope with a gradient of not more than 30 degrees, the distance between any point of the excavation and the outer edge of the crest is at least equal to the height of the slope; (f) if the works are carried out beside the crest of a slope with a gradient of more than 30 degrees – (i) the height of the slope is not more than 3 m; and (ii) the distance between any point of the excavation and the outer edge of the crest is at least equal to 1.5 times the height of the slope; and (g) if the works are carried out beside the top of a retaining wall – (i) the height of the wall is not more than 3 m; and (ii) the distance between any point of the excavation and the wall is at least equal to 1.5. times the height of the wall.
1.26	Addition or alteration of any underground drain, provided that – (a) the works involve an excavation of a depth of more than 1.5 m but not more than 3 m; (b) the distance between any point of the excavation and any structure or building is at least equal to the depth of the excavation; (c) the works do not involve any excavation within area number 1 or 3 of the scheduled areas; (d) the works do not involve the last manhole; and (e) if the works are carried out beside the crest of a slope – (i) the gradient of the slope is not more than 15 degrees; (ii) the height of the slope is not more than 3 m; and (iii) the distance between any point of the excavation and the outer edge of the crest is at least equal to the height of the slope.
1.27	Erection, alteration or removal of any canopy projecting from the external wall of a building over an entrance to the building, provided that – (a) the works do not result in any additional load to any cantilevered slab; (b) the canopy projects more than 500 mm but not more than 2 m from the wall; (c) the canopy is not constructed of concrete; and (d) the distance between the highest point of the canopy and the ground is more than 3 m.
1.28	Erection, alteration or removal of any metal supporting frame for an air-conditioning unit or any associated air ducts projecting from the external wall of a building, provided that – (a) the works do not result in any additional load to any cantilevered slab; (b) no part of the frame projects more than 750 mm from the wall; (c) the distance between the highest point of the frame and the ground is more than 3 m; (d) the frame is designed for an air-conditioning unit of more than 100 kg in weight; and (e) the works do not fall within the description of item 3.27.
1.29	Erection or alteration of any supporting structure for an air-conditioning unit, water cooling tower or any associated air ducts on-grade or on a slab (other than a cantilevered slab), provided that – (a) the height of the structure is not more than 1.5 m; and (b) the structure is designed for an air-conditioning unit or water cooling tower, of more than 150 kg in weight.

Item	Description of building works
1.30	Removal of any unauthorized structure (other than an architectural projection, canopy, frame or rack) projecting more than 2 m from the external wall of a building, provided that, if the structure is fixed to a balcony or canopy that is a cantilevered slab, the span of the balcony or canopy is more than 1 m.
1.31	Erection, repair or removal of any panel fixed by metal dowels and fixings onto a wall inside a building, provided that the distance between the highest point of the panel and the adjoining floor is more than 10 m.
1.32	Removal of any internal staircase that is not used as a means of escape or a means of access for firefighting and rescue, provided that – (a) the works do not involve the alteration of any other structural elements, except a simply supported beam that – (i) is not of pre-stressed construction; and (ii) is not used to support any column, flat slab or ribbed beam; and (b) the works do not fall within the description of item 3.1.
1.33	Building works associated with the removal of any service lift, provided that – (a) the rated load of the lift is not more than 250 kg; (b) the internal floor area of the lift car is not more than 1 m^2; and (c) the internal height of the lift car is not more than 1.2 m.
1.34	Building works associated with the removal of any stairlift or lifting platform.
1.35	Reinstatement in accordance with the original design of a slab in respect of which an opening has been formed, provided that – (a) the works do not result in any additional load to any cantilevered slab; (b) the works do not involve the alteration of any other structural elements; and (c) the area of the opening is more than 1m^2 but not more than 4.5 m^2.
1.36	Removal of any underground drain, provided that – (a) the works involve an excavation of a depth of more than 1.5 m but not more than 3 m; (b) the distance between any point of the excavation and any structure or building is at least equal to the depth of the excavation; (c) the works do not involve any excavation within area number 1 or 3 of the scheduled areas; (d) the works do not involve the last manhole; (e) if the works are carried out beside the crest of a slope with a gradient of not more than 30 degrees, the distance between any point of the excavation and the outer edge of the crest is at least equal to the height of the slope; (f) if the works are carried out beside the crest of a slope with a gradient of more than 30 degrees – (i) the height of the slope is not more than 3 m; and (ii) the distance between any point of the excavation and the outer edge of the crest is at least equal to 1.5 times the height of the slope; and (g) if the works are carried out beside the top of a retaining wall – (i) the height of the wall is not more than 3 m; and (ii) the distance between any point of the excavation and the wall is at least equal to 1.5 times the height of the wall.
1.37	Removal of any chimney attached to the external wall of a building or located on the roof of a building, provided that – (a) the distance between the highest point of the chimney and the level of the adjoining roof is not more than 10 m; and (b) the works do not fall within the description of item 2.37.

Item	Description of building works
1.38	Removal of any unauthorized structure located on-grade or on a slab (other than a cantilevered slab), provided that – (a) the works do not involve the alteration of any other structural elements; (b) the height of the structure is more than 5 m but not more than 10 m; (c) the structure has not more than 2 storeys; (d) the structure is not a flat slab, pre-stressed concrete construction, transfer girder, hanger, cantilevered structure with a span of more than 1.2 m or earth retaining structure; and (e) no structural element of the structure has a span of more than 6 m.
1.39	Removal of any unauthorized floor slab.
1.40	Removal of any metal gate at a fence wall or at an entrance to a building, provided that – (a) the works do not result in any additional load to any cantilevered slab; (b) the works do not involve the alteration of any other structural elements; (c) the weight of at least one leaf of the gate is more than 300 kg; and (d) the height of the gate is not more than 3.2 m.
2.1	Formation of any opening in a slab, provided that – (a) the works do not result in any additional load to any cantilevered slab; (b) the works do not involve the alteration of any other structural elements, except a simply supported beam that – (i) is not of pre-stressed construction; and (ii) is not used to support any column, flat slab or ribbed beam; (c) the area of the opening is not more than 1m^2; and (d) the works do not fall within the description of item 1 of Part 2 of Schedule 2.
2.2	Removal of any supporting structure for an air-conditioning unit, water cooling tower, solar water heating system or photovoltaic system, provided that – (a) the structure is located on-grade or on a slab; (b) if the slab mentioned in paragraph (a) is a cantilevered slab, the span of the slab is not more than 1 m; and (c) the works do not fall within the description of item 3.2.
2.3	Replacement of any glass reinforced polyester water tank located on the roof of a building in accordance with the original design, provided that – (a) the capacity of the tank is not more than 9 m^3 and the water head of the tank is not more than 2 m; and (b) the distance between the tank and the edge of the roof is not more than 1.5 m.
2.4	Removal of any glass reinforced polyester water tank located on the roof of a building, provided that – (a) the capacity of the tank is not more than 9 m^3; and (b) the distance between the tank and the edge of the roof is not more than 1.5 m.
2.5	Repair or replacement of any protective barrier (other than an external reinforced concrete wall or block wall) in accordance with the original design, provided that – (a) the works do not result in any additional load to any cantilevered slab; and (b) the difference in height between the level on which the protective barrier is located and its adjacent level is more than 2 m.
2.6	Erection or alteration of any solid fence wall, provided that – (a) the wall is erected on-grade; and (b) the height of the wall is not more than 1.5 m.
2.7	Erection or alteration of any external mesh fence, provided that – (a) the fence is erected on-grade; and (b) the height of the fence is not more than 3 m.

Item	Description of building works
2.8	Construction, alteration or repair of any window or window wall, provided that – (a) the works do not result in any additional load to any cantilevered slab; (b) no structural element of the window or window wall has a span of more than 6 m; (c) the distance between the highest point of the window or window wall and the ground is more than 3.5 m; (d) if the distance between the highest point of the window or window wall and the ground is not more than 100 m – (i) the works involve the main frame of the window or window wall; or (ii) the works involve the sub-frame of the window or window wall, and the length of the sub-frame is more than 1.2 m; (e) if the distance between the highest point of the window or window wall and the ground is more than 100 m – (i) the area of the external wall opening for the window or window wall is not more than 6 m^2; and (ii) the length or width (whichever is shorter) of the opening is not more than 1.8 m; and (f) the works do not involve the alteration of any other structural elements, except a simply supported beam that – (i) is not of pre-stressed construction; and (ii) is not used to support any column, flat slab or ribbed beam.
2.9	Removal of any window or window wall, provided that – (a) the height of the window or window wall is not more than 6m; (b) the works do not involve the alteration of any other structural elements; and (c) the works do not fall within the description of item 3.7.
2.10	Construction or alteration of any spread footing associated with the carrying out of any other minor works or designated exempted works, provided that – (a) the works involve an excavation of a depth of not more than 1.5 m; (b) the overall gradient of the area bounded by lines 10 m away from the location of the footing in the downhill direction is not more than 5 degrees; (c) there is no slope steeper than 15 degrees within the area mentioned in paragraph (b); (d) there is no retaining wall or terrace wall higher than 1.5 m, or below a line drawn down from the base of the footing that is 45 degrees to the horizontal, within the area mentioned in paragraph (b); (e) the allowable pressure imposed by the footing on the ground is not more than 100 kPa or (if the footing is located below the ground water level) 50 kPa; (f) the footing is not founded on soft clay or mud; and (g) the works do not involve any excavation within area number 1 or 3 of the scheduled areas.
2.11	Excavation works associated with the carrying out of any other minor works or designated exempted works, provided that – (a) the works are not carried out within area number 1 or 3 of the scheduled areas; and (b) the depth of the excavation is more than 0.3 m but not more than 1.5 m.
2.12	Removal of any radio base station for telecommunications services in the form of an enclosure or equipment cabinet together with its supporting structure located on the roof of a building, provided that – (a) the length of the station is not more than 4.5 m; (b) the width of the station is not more than 4.5 m; (c) the height of the station is not more than 2.3 m; and (d) the works do not fall within the description of item 3.8.

Item	Description of building works
2.13	Erection, alteration or removal of any external reinforced concrete wall (other than a load bearing wall) of a building, provided that – (a) the works do not result in any additional load to any cantilevered slab; (b) the works do not involve the alteration of any other structural elements; and (c) the height of the wall is not more than 1.1 m
2.14	Erection, alteration or removal of any external block wall (other than a load bearing wall) of a building, provided that – (a) the works do not result in any additional load to any cantilevered slab; (b) the works do not involve the alteration of any other structural elements; and (c) the height of the wall is more than 1.1 m but not more than 3.5m.
2.15	Repair of any external reinforced concrete wall (other than a load bearing wall) of a building, provided that – (a) the works do not result in any additional load to any cantilevered slab; (b) the works do not involve the alteration of any other structural elements; and (c) the height of the wall is not more than 3.5 rn.
2.16	Erection, alteration or repair of any metal gate at a fence wall or at an entrance to a building, provided that – (a) the works do not result in any additional load to any cantilevered slab; (b) the works do not involve the alteration of any other structural elements; (c) the weight of each leaf of the gate is not more than 300 kg; (d) the weight of at least one leaf of the gate is more than 200 kg; and (e) the height of the gate is not more than 3.2 m.
2.17	Repair of any slab or beam (other than a flat slab, cantilevered slab, ribbed slab, waffle slab, pre-stressed beam, post-tensioned beam, cantilevered beam, transfer plate or transfer beam) in accordance with the original design, provided that the works do not result in any additional load to any cantilevered slab.
2.18	Erection or alteration of any projecting signboard, provided that – (a) the signboard does not consist of stone; (b) the works do not result in any additional load to any cantilevered slab; (c) the works do not involve the alteration of any other structural elements; (d) the display area of the signboard is not more than 10 m^2; (e) no part of the signboard projects more than 4.2 m from the external wall to which it is fixed; (f) the thickness of the signboard is not more than 600 mm; and (g) the works do not fall within the description of item 3.16.
2.19	Erection or alteration of any wall signboard, provided that – (a) the works do not result in any additional load to any cantilevered slab; (b) the works do not involve the alteration of any other structural elements; (c) if the signboard comprises a display system consisting of light emitting diodes, the display area of the signboard is not more than 5 m^2; (d) if the signboard does not comprise any display system consisting of light emitting diodes, the display area of the signboard is not more than 10m^2; (e) if the distance between any part of the signboard and the ground is more than 6 m, the signboard does not consist of stone; and (f) the works do not fall within the description of item 10 of Part 2 of Schedule 2 or item 3.17.

Item	Description of building works
2.20	Erection or alteration of any signboard on or hung underneath the soffit of a balcony or canopy (other than a cantilevered slab), provided that – (a) the signboard does not consist of stone; (b) the display area of the signboard is not more than 2 m^2; (c) no part of the signboard projects beyond the balcony or canopy; (d) the height of the signboard is not more than 600 mm; and (e) the thickness of the signboard is not more than 100 mm.
2.21	Erection or alteration of any outdoor signboard fixed on-grade (other than the construction of a spread footing), provided that – (a) the display area of the signboard is not more than 10 m^2; (b) the thickness of the signboard is not more than 600 mm; and (c) the distance between any part of the signboard and the ground is not more than 2 m.
2.22	Erection or alteration of any outdoor signboard together with a spread footing, provided that – (a) the display area of the signboard is not more than 1m^2; (b) the thickness of the signboard is not more than 300 mm; (c) the distance between any part of the signboard and the ground is not more than 3 m; (d) the works involve an excavation of a depth of not more than 500 mm for construction of the footing; and (e) the works do not involve any excavation within area number 1 or 3 of the scheduled areas.
2.23	Replacement of the display surface of any signboard referred to in item 1.20, 1.21, 1.22, 1.23, 2.18, 2.19, 2.20, 2.21 or 2.22.
2.24	Removal of any projecting signboard, provided that – (a) the display area of the signboard is not more than 20 m^2; and (b) the works do not fall within the description of item 3.18.
2.25	Removal of any signboard located on the roof of a building, or any outdoor signboard fixed on-grade (other than the removal of the spread footing of any outdoor signboard), provided that – (a) the display area of the signboard is not more than 20 m^2; and (b) the works do not fall within the description of item 3.19 or 3.22.
2.26	Removal of any wall signboard, provided that – (a) if the signboard comprises a display system consisting of light emitting diodes, the display area of the signboard is not more than 20 m^2; (b) if the signboard does not comprise any display system consisting of light emitting diodes, the display area of the signboard is not more than 40 m^2; and (c) the works do not fall within the description of item 11 of Part 2 of Schedule 2 or item 3.20.
2.27	Removal of any signboard located on or hung underneath the soffit of a balcony or canopy (other than a cantilevered slab), provided that the works do not fall within the description of item 3.21.

Item	Description of building works
2.28	Repair of any underground drain, provided that – (a) the works involve an excavation of a depth of not more than 1.5 m; (b) the distance between any point of the excavation and any structure or building is at least equal to the depth of the excavation; (c) the works do not involve any excavation within area number 1 or 3 of the scheduled areas; (d) the works do not involve the last manhole; (e) if the works are carried out beside the crest of a slope with a gradient of not more than 30 degrees, the distance between any point of the excavation and the outer edge of the crest is at least equal to the height of the slope; (f) if the works are carried out beside the crest of a slope with a gradient of more than 30 degrees – (i) the height of the slope is not more than 3 m; and (ii) the distance between any point of the excavation and the outer edge of the crest is at least equal to 1.5 times the height of the slope; and (g) if the works are carried out beside the top of a retaining wall – (i) the height of the wall is not more than 3 m; and (ii) the distance between any point of the excavation and the wall is at least equal to 1.5 times the height of the wall.
2.29	Addition or alteration of any underground drain, provided that – (a) the works involve an excavation of a depth of not more than 1.5 m; (b) the distance between any point of the excavation and any structure or building is at least equal to the depth of the excavation; (c) the works do not involve any excavation within area number 1 or 3 of the scheduled areas; (d) the works do not involve the last manhole; and (e) if the works are carried out beside the crest of a slope – (i) the gradient of the slope is not more than 15 degrees; (ii) the height of the slope is not more than 3 m; and (iii) the distance between any point of the excavation and the outer edge of the crest is at least equal to the height of the slope.
2.30	Erection, alteration or removal of any aboveground drain, provided that – (a) the works do not result in any additional load to any cantilevered slab; and (b) the works do not fall within the description of item 3.23.
2.31	Removal of any architectural projection, canopy, supporting frame for an air-conditioning unit or any associated air ducts, or rack (other than a drying rack), projecting from the external wall of a building, provided that – (a) the projection, canopy, frame or rack projects more than 750 mm from the wall; (b) the projection, canopy, frame or rack is not constructed of concrete; and (c) the works do not fall within the description of item 13 or 14 of Part 2 of Schedule 2.
2.32	Removal of any unauthorized structure (other than an architectural projection, canopy, frame or rack) projecting not more than 2 m from the external wall of a building, provided that, if the structure is fixed to a balcony or canopy that is a cantilevered slab, the span of the balcony or canopy is not more than 1 m.
2.33	Erection, repair or removal of any panel fixed by metal dowels and fixings onto a wall inside a building, provided that the distance between the highest point of the panel and the adjoining floor is more than 3 m but not more than 10 m.

Item	Description of building works
2.34	Laying, repair or removal of any external rendering, external wall tile or roof tile of a building, provided that – (a) in the case of the repair of any external rendering, the distance between the highest point of the area in respect of which the repair is to be carried out and the adjoining ground or adjoining floor is more than 3 m; (b) in the case other than the repair of any external rendering, the distance between the highest point of the rendering or tile and the adjoining ground or adjoining floor is more than 3 m; and (c) in the case of roof tile, the gradient of the roof is more than 1 in 4.
2.35	Reinstatement in accordance with the original design of a slab in respect of which an opening has been formed, provided that – (a) the works do not result in any additional load to any cantilevered slab; (b) the works do not involve the alteration of any other structural elements; (c) the distance between the 2 points that are farthest away from each other within the area of the opening is more than 150 mm; and (d) the area of the opening is not more than $1m^2$.
2.36	Removal of any underground drain, provided that – (a) the works involve an excavation of a depth of not more than 1.5 m; (b) the distance between any point of the excavation and any structure or building is at least equal to the depth of the excavation; (c) the works do not involve any excavation within area number I or 3 of the scheduled areas; (d) the works do not involve the last manhole; (e) if the works are carried out beside the crest of a slope with a gradient of not more than 30 degrees, the distance between any point of the excavation and the outer edge of the crest is at least equal to the height of the slope; (f) if the works are carried out beside the crest of a slope with a gradient of more than 30 degrees – (i) the height of the slope is not more than 3 m; and (ii) the distance between any point of the excavation and the outer edge of the crest is at least equal to 1.5 times the height of the slope; and (g) if the works are carried out beside the top of a retaining wall – (i) the height of the wall is not more than 3 m; and (ii) the distance between any point of the excavation and the wall is at least equal to 1.5 times the height of the wall.
2.37	Removal of any chimney attached to the external wall of a building or located on the roof of a building, provided that – (a) the smallest cross-sectional dimension of the chimney is not more than 500 mm; and (b) the distance between the highest point of the chimney and the level of the adjoining roof is not more than 5 m.
2.38	Removal of any unauthorized structure hung underneath the soffit of a balcony or canopy (other than a cantilevered slab) or fixed to a balcony or canopy (other than a cantilevered slab).
2.39	Removal of any unauthorized single storey structure located on-grade or on a slab (other than a cantilevered slab), provided that – (a) the works do not involve the alteration of any other structural elements; (b) the height of the structure is not more than 5 m; (c) the structure is not a flat slab, pre-stressed concrete construction, transfer girder, hanger, cantilevered structure with a span of more than 1.2 m or earth retaining structure; (d) no structural element of the structure has a span of more than 6 m; and (e) the works do not fall within the description of item 3.32.

Item	Description of building works
2.40	Removal of any metal gate at a fence wall or at an entrance to a building, provided that – (a) the works do not result in any additional load to any cantilevered slab; (b) the works do not involve the alteration of any other structural elements; (c) the weight of each leaf of the gate is not more than 300 kg; (d) the weight of at least one leaf of the gate is more than 200 kg; and (e) the height of the gate is not more than 3.2 m.
3.1	Removal of the whole of any internal staircase on the lowest storey of a building that is not used as a means of escape or a means of access for firefighting and rescue, provided that – (a) the height of the staircase is not more than 1.5 m; and (b) the works do not involve the alteration of any other structural elements, except a simply supported beam that – (i) is not of pre-stressed construction; and (ii) is not used to support any column, flat slab or ribbed beam.
3.2	Removal of any supporting structure for an air-conditioning unit, water cooling tower, solar water heating system or photovoltaic system, provided that – (a) the structure is located on-grade or on a slab (other than a cantilevered slab); (b) the height of the structure is more than 1 m but not more than 2 m; and (c) if the structure is located on the roof of a building – (i) the distance between any part of the structure and the edge of the roof is more than 1.5 m; or (ii) there is a protective barrier with a height of not less than 1.1 m at the edge of the roof.
3.3	Repair or replacement of any protective barrier (other than an external reinforced concrete wall or block wall) in accordance with the original design, provided that – (a) the works do not result in any additional load to any cantilevered slab; and (b) the difference in height between the level on which the protective barrier is located and its adjacent level is not more than 2 m.
3.4	Removal of any solid fence wall, provided that – (a) the wall is erected on-grade; and (b) the height of the wall is more than 1.1 m but not more than 3m.
3.5	Removal of any external mesh fence, provided that – (a) the fence is erected on-grade; and (b) the height of the fence is more than 3 m but not more than 5 m.
3.6	Construction, alteration or repair of any window or window wall, provided that – (a) the works do not result in any additional load to any cantilevered slab; (b) if the distance between the highest point of the window or window wall and the ground is more than 3.5 m but not more than 100 m – (i) the works involve the sub-frame of the window or window wall only; and (ii) the length of the sub-frame is not more than 1.2 m; (c) if the distance between the highest point of the window or window wall and the ground is not more than 3.5 m, no structural element of the window or window wall has a span of more than 6 m; and (d) the works do not involve the alteration of any other structural elements, except a simply supported beam that – (i) is not of pre-stressed construction; and (ii) is not used to support any column, flat slab or ribbed beam.

Item	Description of building works
3.7	Removal of any window or window wall, provided that – (a) the works do not involve the alteration of any other structural elements; and (b) the distance between the highest point of the window or window wall and the ground is not more than 3.5 m.
3.8.	Removal of any radio base station for telecommunications services in the form of an enclosure or equipment cabinet together with its supporting structure located on the roof of a building, provided that – (a) the distance between any part of the station and the edge of the roof is more than 1.5 m; (b) the works do not involve any structural elements constructed of concrete; (c) the length of the station is not more than 4.5 m; (d) the width of the station is not more than 4.5 m; and (e) the height of the station is not more than 2 m.
3.9	Erection, alteration or removal of any supporting structure for an antenna or transceiver on the roof of a building, provided that – (a) the works do not result in any additional load to any cantilevered slab; (b) no part of the structure projects beyond the external wall of the building; and (c) the structure is designed for an antenna or transceiver of not more than 150 kg in weight.
3.10	Removal of any supporting structure for an antenna or transceiver located on the roof of a building.
3.11	Erection, alteration or removal of any external block wall (other than a load bearing wall) of a building, provided that – (a) the works do not result in any additional load to any cantilevered slab; (b) the works do not involve the alteration of any other structural elements; and (c) the height of the wall is not more than 1.1 m.
3.12	Repair of any external block wall (other than a load bearing wall) of a building, provided that – (a) the works do not result in any additional load to any cantilevered slab; (b) the works do not involve the alteration of any other structural elements; and (c) the height of the wall is not more than 3.5 m.
3.13	Erection, alteration, repair or removal of any metal gate at a fence wall or at an entrance to a building, provided that – (a) the works do not result in any additional load to any cantilevered slab; (b) the works do not involve the alteration of any other structural elements; (c) the weight of each leaf of the gate is not more than 200 kg; (d) the height of the gate is not more than 3.2 m; and (e) the works do not fall within the description of item 8 of Part 2 of Schedule 2.
3.14	Erection, alteration or removal of any supporting structure for a solar water heating system on-grade or on a slab (other than a cantilevered slab), provided that – (a) the height of the structure is not more than 1.5 m; (b) the structure is designed for a solar water heating system none of the thennal collectors of which is more than 200 kg in weight; (c) if the thermal collector and the water tank of the system are integrated, the structure is designed for a system the gross weight (when the water tank is in full capacity) of which is not more than 100 kg per m^2 of the ground or slab area; and (d) the works do not fall within the description of item 12 of Part 2 of Schedule 2.

Item	Description of building works
3.15	Erection, alteration or removal of any supporting structure for a photovoltaic system on-grade or on a slab (other than a cantilevered slab), provided that – (a) the height of the structure is not more than 1.5 m; (b) the structure is designed for a photovoltaic system none of the modules of which is more than 200 kg in weight; and (c) the works do not fall within the description of item 12 of Part 2 of Schedule 2.
3.16	Erection, alteration or removal of any projecting signboard (including the replacement of the display surface of any signboard), provided that – (a) the signboard does not consist of stone; (b) the works do not result in any additional load to any cantilevered slab; (c) the works do not involve the alteration of any other structural elements; (d) the display area of the signboard is not more than 1 m^2; (e) no part of the signboard projects more than 1 m from the external wall to which it is fixed; (f) the thickness of the signboard is not more than 300 mm; and (g) the distance between any part of the signboard and the ground is not more than 6 m.
3.17	Erection, alteration or removal of any wall signboard (including the replacement of the display surface of any signboard), provided that – (a) the works do not result in any additional load to any cantilevered slab; (b) the works do not involve the alteration of any other structural elements; (c) the display area of the signboard is not more than 5 m^2; (d) the distance between any part of the signboard and the ground is not more than 6 m; and (e) the works do not fall within the description of item 10 or 11 of Part 2 of Schedule 2.
3.18	Removal of any projecting signboard, provided that – (a) the display area of the signboard is not more than 2 m^2; (b) no part of the signboard projects more than 2 m from the external wall to which it is fixed; and (c) the distance between any part of the signboard and the ground is not more than 6 m.
3.19	Removal of any signboard located on the roof of a building, provided that – (a) the display area of the signboard is not more than 5 m^2; (b) the height of the signboard is not more than 2 m; and (c) the distance between any part of the signboard and the edge of the roof is more than 1.5 m.
3.20	Removal of any wall signboard, provided that – (a) the display area of the signboard is not more than 10 m^2; (b) the distance between any part of the signboard and the ground is not more than 6 m; and (c) the works do not fall within the description of item 11 of Part 2 of Schedule 2.
3.21	Removal of any signboard located on or hung underneath the soffit of a balcony or canopy (other than a cantilevered slab), provided that – (a) if the signboard is located on a balcony or canopy, the display area of the signboard is not more than 5 m^2; (b) if the signboard is hung underneath the soffit of a balcony or canopy, the display area of the signboard is not more than 2 m^2; and (c) the height of the signboard is not more than 1 m.
3.22	Removal of any outdoor signboard fixed on-grade (other than the removal of the spread footing of any outdoor signboard), provided that – (a) the display area of the signboard is not more than 1 m^2; and (b) the distance between any part of the signboard and the ground is not more than 3 m.

Item	Description of building works
3.23	Erection, alteration or removal of any aboveground drain, provided that – (a) the works do not result in any additional load to any cantilevered slab; (b) the works do not involve any main pipe, other than the replacement of components at existing junctions; and (c) the works do not involve any embedded pipe, other than a pipe that passes through a wall or slab.
3.24	Removal of any aboveground drain the erection of which was unauthorized.
3.25	Erection, alteration or removal of any canopy projecting from the external wall of a building, provided that – (a) the works do not result in any additional load to any cantilevered slab; (b) no part of the canopy projects more than 500 mm from the wall; (c) the canopy is not constructed of concrete; and (d) the distance between the highest point of the canopy and the ground is more than 3 m.
3.26	Removal of any architectural projection, canopy, supporting frame for an air-conditioning unit or any associated air ducts, or rack (other than a drying rack), projecting from the external wall of a building, provided that – (a) no part of the projection, canopy, frame or rack projects more than 750 mm from the wall; (b) the projection, canopy, frame or rack is not constructed of concrete; and (c) the works do not fall within the description of item 13 or 14 of Part 2 of Schedule 2.
3.27	Erection, alteration or removal of any metal supporting frame for an air-conditioning unit or any associated air ducts projecting from the external wall of a building, provided that – (a) the works do not result in any additional load to any cantilevered slab; (b) no part of the frame projects more than 600 mm from the wall; (c) the distance between the highest point of the frame and the ground is more than 3 m; and (d) the frame is designed for an air-conditioning unit of not more than 100 kg in weight.
3.28	Erection, alteration or removal of any supporting structure for an air-conditioning unit, water cooling tower or any associated air ducts on-grade or on a slab (other than a cantilevered slab), provided that – (a) the height of the structure is not more than 1.5 m; (b) the structure is designed for an air-conditioning unit or water cooling tower, of not more than 150 kg in weight; and (c) the works do not fall within the description of item 12 of Part 2 of Schedule 2.
3.29	Erection, alteration or removal of any drying rack projecting from the external wall of a building, provided that – (a) the works do not result in any additional load to any cantilevered slab; (b) no part of the rack projects more than 750 mm from the wall; and (c) the distance between the highest point of the rack and the ground is more than 3 m.
3.30	Removal of any drying rack projecting from the external wall of a building, provided that the works do not fall within the description of item 15 of Part 2 of Schedule 2.
3.31	Erection, repair or removal of any cladding fixed to the external wall of a building, provided that the distance between any part of the cladding and the adjoining ground or adjoining floor is not more than 6m.

Item	Description of building works
3.32	Removal of any unauthorized single storey structure located on-grade or on a slab (other than a cantilevered slab), provided that – (a) the works do not involve the alteration of any other structural elements; (b) the height of the structure is not more than 2.5 m; (c) the structure is not a flat slab, pre-stressed concrete construction, transfer girder, hanger, cantilevered structure with a span of more than 1.2 m or earth retaining structure; (d) no structural element of the structure has a span of more than 4.5 m; (e) the structure has a roofed over area of not more than 20 m^2; and (f) if the structure is located on the roof of a building, the distance between any part of the structure and the edge of the roof is more than 1.5 m.
3.33	Removal of any metal gate at a fence wall or at an entrance to a building, provided that – (a) the works do not result in any additional load to any cantilevered slab; (b) the works do not involve the alteration of any other structural elements; (c) the weight of each leaf of the gate is not more than 200 kg; (d) the height of the gate is not more than 3.2 m; and (e) the works do not fall within the description of item 8 of Part 2 of Schedule 2.
3.34	Strengthening of any unauthorized supporting structure for an air-conditioning unit, water cooling tower or any associated air ducts located on-grade or on a slab (other than a cantilevered slab), provided that the structure is designed for an air-conditioning unit or water cooling tower, of not more than 100 kg in weight.
3.35	Strengthening of any unauthorized metal supporting frame for an air-conditioning unit or any associated air ducts projecting from the external wall of a building, provided that – (a) the works do not result in any additional load to any cantilevered slab; (b) no part of the frame projects more than 600 mm from the wall; (c) the frame is designed for an air-conditioning unit of not more than 100 kg in weight; and (d) if the distance between the highest point of the frame and the ground is not more than 3 m, the frame does not project over any street or common part of the building.
3.36	Strengthening of any unauthorized drying rack projecting from the external wall of a building, provided that – (a) the works do not result in any additional load to any cantilevered slab; (b) no part of the rack projects more than 750 mm from the wall; and (c) if the distance between the highest point of the rack and the ground is not more than 3 m, the rack does not project over any street or common part of the building.
3.37	Strengthening of any unauthorized canopy projecting from the external wall of a building, provided that – (a) the works do not result in any additional load to any cantilevered slab; (b) no part of the canopy projects more than 500 mm from the wall; (c) the canopy is not constructed of concrete; and (d) if the distance between the highest point of the canopy and the ground is not more than 3 m, the canopy does not project over any street or common part of the building.
3.38	Alteration of any unauthorized canopy projecting from the external wall of a building, provided that – (a) the works do not result in any additional load to any cantilevered slab; (b) the canopy is not constructed of concrete; (c) immediately before the alteration, the canopy projects more than 500 mm from the wall, but no part of the canopy projects more than 750 mm from the wall; (d) immediately after the alteration, no part of the canopy projects more than 500 mm from the wall; and (e) if the distance between the highest point of the canopy and the ground is not more than 3 m, the canopy does not project over any street or common part of the building.

Appendix III – "Prescribed Registered Contractors" to be Appointed for Carrying Out "Minor Works"

Prescribed Registered Contractors ("PRC")		Minor Works Item
RGBC		All
RSC		
	Demolition Works	1.5, 1.9, 1.10, 1.24, 1.30, 1.32, 1.33, 1.34, 1.36, 1.37, 1.38, 1.39, 1.40, 2.2, 2.4, 2.9, 2.12, 2.24, 2.25, 2.26, 2.27, 2.31, 2.32, 2.37, 2.38, 2.39, 2.40, 3.1, 3.2, 3.4, 3.5, 3.7, 3.8, 3.10, 3.18, 3.19, 3.20, 3.21, 3.22, 3.24, 3.26, 3.30, 3.32 or 3.33
	Site Formation Works	1.11, 1.12, 2.10 or 2.11
	Foundation Works	
	Ground Investigation Field Works	1.12 or 2.11
RMWC (Company)		registered for the type of minor works to be carried out
RMWC (Individual)		registered for the item of minor works to be carried out

Appendix IV – Checklist of Specified Forms & Standard Forms

Specified Forms	Description
MW01	Notice of Commencement of Minor Works under the Simplified Requirements (with Prescribed Building Professionals Appointed)
MW02	Certificate of Completion of Minor Works under the Simplified Requirements (with Prescribed Building Professionals Appointed)
MW03	Notice of Commencement of Minor Works under the Simplified Requirements (without Prescribed Building Professional Appointed)
MW04	Certificate of Completion of Minor Works under the Simplified Requirements (without Prescribed Building Professional Appointed)
MW05	Notice and Certificate of Completion of Class III Minor Works under the Simplified Requirements
MW06	Notice of Inspection and Certification of Prescribed Building or Building Works
MW07	Notice of Change in Appointment of Registered Structural Engineer, Registered Geotechnical Engineer or Prescribed Registered Contractor under the Simplified Requirements
MW08	Notice of Change in Appointment of Authorized Person or Registered Inspector under the Simplified Requirements
MW09	Notice of Nomination by Prescribed Building Professional Appointed of Another Prescribed Building Professional to Act in His Place for the Period of Temporary Inability to Act under the Simplified Requirements
MW10	Notice of Prescribed Registered Contractor on Ceasing to be Appointed under the Simplified Requirements
MW11	Notice of Commencement of Additional Minor Works under the Simplified Requirements (with Prescribed Building Professionals Appointed)
MW12	Notice of Commencement of Additional Minor Works under the Simplified Requirements (without Prescribed Building Professional Appointed)
Standard Forms	**Description**
MW31	Notice of Prescribed Building Professional on Ceasing to be Appointed or Nominated under the Simplified Requirements
MW32	Request for Submission Number for Class III Minor Works Relating to the Erection or Alteration of Signboard under the Simplified Requirements
MW33	Submission of Supplementary Documents or Information under the Simplified Requirements

2012/06 Revisions are marked in blue for ease of reference.

屋宇署 BUILDINGS DEPARTMENT MW01

簡化規定下的小型工程展開通知書（有委任訂明建築專業人士）
NOTICE OF COMMENCEMENT OF MINOR WORKS UNDER THE SIMPLIFIED REQUIREMENTS (WITH PRESCRIBED BUILDING PROFESSIONALS APPOINTED)

本表格及所有證明文件最遲須在展開小型工程項目前 7 天呈交
This form and all supporting document(s) must be submitted not less than 7 days before the commencement of minor works item(s)

請以正楷填寫表格，並在適當方格內加上『✓』號。填寫前，請仔細閱讀《注意事項》。
Please read the "Matters to Note", complete the form in BLOCK LETTERS and tick in the appropriate box(es).

致建築事務監督
To the Building Authority

只供屋宇署填寫 For Buildings Department's Use only
小型工程呈交編號 →
Minor Works Submission Number

甲部 獲委任人士的委任通知 *（由安排進行小型工程的人填寫）*
Part A Notice of appointment of the appointed persons
(To be completed by the person who arranged for the minor works to be carried out)

1. 擬進行小型工程的位置或地址
Location or Address of the proposed minor works to be carried out

FLAT A ON 1/F. & FLAT A ON 2/F.,
XYZ MANSION,
456 SOY STREET,
KOWLOON

徵收差餉及/或地租通知書左上角的帳目編號
The Account Number printed on the top left-hand corner of the Demand for Rates and/or Government Rent

0 1 2 3 4 5 6 7 8 9 1 2 3 4 5 6 7 8 9

為方便確定工程位置或地址，可選擇提供
Optional for easy identification of the location or address of the works

2. 擬進行的小型工程的詳情
Details of the proposed minor works to be carried out

☐ 另加附加頁 張
Additional __ Page added

小型工程項目 Minor works Item	描述 Description	（如有） 請提供相關命令 / 指示 / 通知 / 屋宇署檔案 編號 Relevant Order / Direction / Notice / BD Reference Number (if available)
1.2	FORMATION OF SLAB OPENING (1.5m X 1.5m) BETWEEN FLAT A ON 1/F. & FLAT A ON 2/F.	
1.1	ERECTION OF INTERNAL STAIRCASE THAT IS NOT USED AS A MEANS OF ESCAPE OR A MEANS OF ACCESS FOR FIREFIGHTING AND RESCUE FROM FLAT A ON 1/F TO FLAT A ON 2/F	
2.18	ERECTION OF PROJECTING SIGNBOARD WITH DISPLAY AREA OF 10 m^2, NOT CONSIST OF STONE, ON EXTERNAL WALL OF FLAT A FROM 1/F TO 2/F FACING SOY STREET	

各項小型工程項目及其描述（包括性質、位置和數量）必須提供。如空位不敷應用，請另加紙張填寫，附於本通知書內，並在每頁加簽、註明日期及*（如適用）*蓋上公司印鑑。
Every minor works item and its description (including the nature, location and quantity) shall be provided. If space is insufficient, please attach additional sheet(s) which must be signed, dated and affixed with company seal *(if applicable)*.

3. 獲委任人士的資料
Particulars of the appointed persons

a. 根據《建築物（小型工程）規例》第 28 條的規定，本人/我們已就本部所述工程委任下述的**訂明註冊承建商**。
In accordance with the provisions of section 28 of the Building (Minor Works) Regulation, I/we have appointed the **prescribed registered contractor** as below in respect of the works detailed in this Part.

公 私 聯 成 建 雙 工 程 有 限 公 司
訂明註冊承建商中文名稱*Name in Chinese of the prescribed registered contractor*

MWC 4 5 6 7 9 0 / 2 0 1 1
註冊證明書編號*
Certificate of Registration Number*

GUNG SI PAI SING GIN SOENG ENGINEERING COMPANY
訂明註冊承建商英文名稱* Name in English of the prescribed registered contractor*

LIMITED
訂明註冊承建商英文名稱*（續） Name in English of the prescribed registered contractor*(Cont'd)

* *根據註冊記錄 In accordance with the registration record*

COMPLETED BY THE PERSON WHO ARRANGED FOR THE MINOR WORKS TO BE CARRIED OUT

2012/06 Replaced

SAMPLE MW01

3. 獲委任人士的資料 *(續)*
Particulars of the appointed persons *(Cont'd)*

b. 根據《建築物(小型工程)規例》第 27 條的規定，本人/我們已就本部所述的第 I 級別小型工程委任下述的**訂明建築專業人士**。
In accordance with the provisions of section 27 of the Building (Minor Works) Regulation, I/we have appointed the **prescribed building professionals** as below in respect of the Class I minor works detailed in this Part.

☑ 認可人士 authorized person
☐ 註冊檢驗人員 registered inspector

中文姓名*Name in Chinese*: 認可仁
註冊證明書編號* Certificate of Registration Number*: AP(A)9999/99
英文姓名* Name in English*: YING HO YAN

☑ 註冊結構工程師 registered structural engineer

中文姓名*Name in Chinese*: 恭晴司
註冊證明書編號* Certificate of Registration Number*: RSE 8888/88
英文姓名* Name in English*: GUNG CHI SZE

☐ 註冊岩土工程師 registered geotechnical engineer

中文姓名*Name in Chinese*:
註冊證明書編號* Certificate of Registration Number*: RGE /
英文姓名* Name in English*:

4. 安排進行小型工程的人的詳情
Particulars of the person who arranged for the minor works to be carried out

中文名稱 Name in Chinese: 請仁造

英文名稱 *(如有，姓氏先行)* Name in English *(Surname first, if any)*: CHING YAN CHO

英文名稱 *(如有，姓氏先行)(續)* Name in English *(Surname first, if any) (Cont'd)*:

☑ 香港身份證號碼 HKID Number: A123456(7)
☐ 商業登記號碼 Business Registration Number
☐ 護照號碼 Passport Number
☐ 其他 *(請註明)* Others *(Please specify)*:

護照簽發國家 *(如適用)* Country of issue of passport *(If applicable)*:

通訊地址 *(如與甲 1 部份相同，則不用填寫)*
Correspondence Address *(Not required to complete if same as Part A1)*

FLAT B, 11/F.,
ABC BUILDING,
789 KWUN TONG ROAD,
KOWLOON

傳真號碼 Fax Number: 21234568
聯絡電話 Contact Number: 21234567

電郵地址 E-mail Address: cengyanzou@email.com

請仁造
安排進行小型工程的人 簽署 *(如適用)* 蓋上公司印鑑
Signature of the person who arranged for the minor works to be carried out & affixed with company seal *(if applicable)*

日 *day* 07 月 *month* 2012 年 *year*

* *根據註冊記錄 In accordance with the registration record*

COMPLETED BY THE PERSON WHO ARRANGED FOR THE MINOR WORKS TO BE CARRIED OUT

SAMPLE MW01

乙部　認可人士或註冊檢驗人員的委任確認書 *（由已獲委任的認可人士或註冊檢驗人員填寫）*

Part B Confirmation of appointment by the authorized person or registered inspector

(To be completed by the authorized person or registered inspector appointed)

本人 認可仁
中文姓名*Name in Chinese*

I, YING HO YAN,
英文姓名*Name in English*

根據《建築物（小型工程）規例》第 30 條及第 37 條的規定，
in accordance with the provisions of sections 30 and 37 of the Building (Minor Works) Regulation,

1. 確認本人已獲委任為**甲部**所述的**第 I 級別**小型工程的認可人士或註冊檢驗人員(如該工程屬訂明修葺或任何相關的拆卸工程);
confirm that I have been appointed as the authorized person or registered inspector (if the works are a prescribed repair or any associated demolition works) for the **Class I** minor works detailed in **Part A**;

2. 確認**甲部**所述的**第 I 級別**小型工程將於 11 07 2012 展開;
confirm that the **Class I** minor works detailed in **Part A** are to be commenced on 日 *day* 月 *month* 年 *year*;

3. 現呈交顯示**甲部**所述的**第 I 級別**小型工程的訂明圖則及詳圖，和處所實際狀況的照片；
submit herewith the prescribed plans and details of the **Class I** minor works detailed in **Part A**, and the photographs showing the physical condition of the premises where the **Class I** minor works detailed in **Part A** are to be carried out;

4. 確認在本部呈交的訂明圖則及詳圖，均由本人製備和簽署（作為已簽署有關圖則的人，本人同意為該等圖則負起《建築物條例》下的所有責任）;
confirm that the prescribed plans and details submitted under this Part, have been prepared and signed by me (as the person who has signed the plans, I agree to assume all responsibilities under the Buildings Ordinance regarding the plans);

5. 當**甲部**所述的**第 I 級別**小型工程包括對任何建築物進行修葺、改動或加建時，已核證以下事宜：在檢查該建築物後，本人認為該建築物有能力承受因**第 I 級別**小型工程而可能有所增加或在任何方面有所改動的荷載及應力；
where the **Class I** minor works detailed in **Part A** comprise repairs, alterations or additions to any building, certified that, after inspecting the building, I am of the opinion that the building is capable of bearing the loads and stresses which may be increased or altered in any way as a result of the **Class I** minor works;

6. 當**甲部**所述的**第 I 級別**小型工程涉及豎設招牌時，確認由他人代為豎設招牌的人士已在**己部**提供建築事務監督所要求的詳情；及
where the **Class I** minor works detailed in **Part A** involve the erection of a signboard, confirm that the person for whom the signboard is to be erected has provided the particulars of the person as required by the Building Authority in **Part F**; and

7. 當技術備忘錄要求有監工計劃書時，現呈交監工計劃書。
where supervision plan is required by the technical memorandum, submit herewith a supervision plan.

（只在早前已獲分配相關呈交編號的文件不能繼續處理時適用）
(Only applicable where the previous submission with Minor Works Submission Number assigned cannot be further processed)

MW
早前相關的小型工程呈交編號
Previously Related Minor Works Submission Number

2123456666
傳真號碼* Fax Number*

2123456655
聯絡電話 Contact Number

☑ 願意接收短訊通知
Willing to receive Short Messaging Service (SMS) Notification

AP(A)9999/99
註冊證明書編號*
Certificate of Registration Number*

註冊屆滿日期* Date of expiry of registration* 04 07 2013
日 *day* 月 *month* 年 *year*

認可仁
認可人士或註冊檢驗人員 簽署*
Signature* of the authorized person or registered inspector

04 07 2012
日 *day* 月 *month* 年 *year*

COMPLETED BY THE AUTHORIZED PERSON OR REGISTERED INSPECTOR

SAMPLE MW01

* *根據註冊記錄 In accordance with the registration record*

COMPLETED BY THE REGISTERED STRUCTURAL ENGINEER

丙部 註冊結構工程師的委任確認書 *(由已獲委任的註冊結構工程師填寫)*
Part C Confirmation of appointment by the registered structural engineer
(To be completed by the registered structural engineer appointed)

本人 恭晴司
中文姓名*Name in Chinese*

I, GUNG CHI SZE,
英文姓名*Name in English*

根據《建築物(小型工程)規例》第 30 條及第 37 條的規定，
in accordance with the provisions of sections 30 and 37 of the Building (Minor Works) Regulation,

1. 確認本人已獲委任為**甲部**所述的**第 I 級別**小型工程的結構元素的註冊結構工程師；
confirm that I have been appointed as the registered structural engineer for the structural elements of the **Class I** minor works detailed in **Part A**;
2. 確認在**乙部**呈交的訂明圖則及詳圖內的基礎圖則、結構詳圖或計算資料，均由本人製備和簽署(作為已簽署有關圖則的人，本人同意為該等圖則負起《建築物條例》下的所有責任)；及
confirm that the foundation plans, structural details or calculations submitted under the prescribed plans and details in **Part B** have been prepared and signed by me (as the person who has signed the plans, I agree to assume all responsibilities under the Buildings Ordinance regarding the plans); and
3. 當**甲部**所述的**第 I 級別**小型工程包括對任何建築物進行修葺、改動或加建時，已核證以下事宜：在檢查該建築物後，本人認為該建築物有能力承受因**第 I 級別**小型工程而可能有所增加或在任何方面有所改動的荷載及應力；
where the **Class I** minor works detailed in **Part A** comprise repairs, alterations or additions to any building, certified that, after inspecting the building, I am of the opinion that the building is capable of bearing the loads and stresses which may be increased or altered in any way as a result of the **Class I** minor works;

RSE 8888/88
註冊證明書編號*
Certificate of Registration Number*

2123456 4
聯絡電話 Contact Number
☑ 願意接收短訊通知
Willing to receive Short Messaging Service (SMS) Notification

註冊屆滿日期* 04 07 2013
Date of expiry of registration*
日 月 年
day month year

恭晴司
註冊結構工程師 簽署*
Signature* of the registered structural engineer

04 07 2012
日 月 年
day month year

COMPLETED BY THE REGISTERED GEOTECHNICAL ENGINEER

丁部 註冊岩土工程師的委任確認書 *(由已獲委任的註冊岩土工程師填寫)*
Part D Confirmation of appointment by the registered geotechnical engineer
(To be completed by the registered geotechnical engineer appointed)

本人
中文姓名*Name in Chinese*

I,
英文姓名*Name in English*

根據《建築物(小型工程)規例》第 30 條及第 37 條的規定，
in accordance with the provisions of sections 30 and 37 of the Building (Minor Works) Regulation,

1. 確認本人已獲委任為**甲部**所述的**第 I 級別**小型工程的岩土元素的註冊岩土工程師；及
confirm that I have been appointed as the registered geotechnical engineer for the geotechnical elements of the **Class I** minor works detailed in **Part A**; and
2. 確認在**乙部**呈交的訂明圖則及詳圖內的岩土圖則、岩土評估、岩土詳圖或計算資料及岩土報告，均由本人製備和簽署(作為已簽署有關圖則的人，本人同意為該等圖則負起《建築物條例》下的所有責任)。
confirm that the geotechnical plans, geotechnical assessment, geotechnical details or calculations and geotechnical reports submitted under the prescribed plans and details in **Part B** have been prepared and signed by me (as the person who has signed the plans, I agree to assume all responsibilities under the Buildings Ordinance regarding the plans).

RGE /
註冊證明書編號*
Certificate of Registration Number*

聯絡電話 Contact Number
☐ 願意接收短訊通知
Willing to receive Short Messaging Service (SMS) Notification

註冊屆滿日期* 20
Date of expiry of registration*
日 月 年
day month year

註冊岩土工程師 簽署*
Signature* of the registered geotechnical engineer

20
日 月 年
day month year

* *根據註冊記錄 In accordance with the registration record*

Optional Page - To be submitted when any parts is completed

SAMPLE MW01

2012/06 Replaced

戊部 訂明註冊承建商的委任確認書 *（由已獲委任的訂明註冊承建商填寫）*
Part E Confirmation of appointment by the prescribed registered contractor
(To be completed by the prescribed registered contractor appointed)

我們 公私牌成建築工程有限公司
中文名稱* Name in Chinese*

We, GUNG SI PAI SING GIN SOENG ENGINEERING COMPANY
英文名稱* Name in English*

LIMITED,
英文名稱* *（續）* Name in English**(Cont'd)*

根據《建築物（小型工程）規例》第 30 條、第 33 條及第 37 條 *（當涉及**第 II 級別**小型工程時）*的規定，
in accordance with the provisions of sections 30, sections 33 and 37 *(where **Class II** minor works are involved)* of the Building (Minor Works) Regulation,

1. 確認我們已獲委任為**甲部**所述工程的訂明註冊承建商；
confirm that we have been appointed as the prescribed registered contractor of the works detailed in **Part A**;

當甲部所述工程涉及第 II 級別小型工程時，
where Class II minor works are involved in the works detailed in Part A,

2. 確認**甲部**所述的**第 II 級別**小型工程將於**乙部**第 2 段所述同日展開；
confirm that the **Class II** minor works detailed in **Part A** are to be commenced on the same date as stated in paragraph 2 of **Part B**;
3. 現呈交顯示**甲部**所述的**第 II 級別**小型工程的訂明圖則及詳圖，和處所實際狀況的照片；
submit herewith the prescribed plans and details of the **Class II** minor works detailed in **Part A**, and the photographs showing the physical condition of the premises where the **Class II** minor works detailed in **Part A** are to be carried out;
4. 確認在本部呈交的訂明圖則及詳圖，均由我們製備和簽署（作為已簽署有關圖則的人，我們同意為該等圖則負起《建築物條例》下的所有責任）；
confirm that the prescribed plans and details submitted under this Part, have been prepared and signed by us (as the person who has signed the plans, we agree to assume all responsibilities under the Buildings Ordinance regarding the plans);
5. 當**甲部**所述的**第 II 級別**小型工程包括對任何建築物進行修葺、改動或加建時，已核證以下事宜：在檢查該建築物後，我們認為該建築物有能力承受因**第 II 級別**小型工程而可能有所增加或在任何方面有所改動的荷載及應力；及
where the **Class II** minor works detailed in **Part A** comprise repairs, alterations or additions to any building, certified that, after inspecting the building, we are of the opinion that the building is capable of bearing the loads and stresses which may be increased or altered in any way as a result of the **Class II** minor works; and
6. 當**甲部**所述的**第 II 級別**小型工程涉及豎設招牌時，確認由他人代為豎設招牌的人士已在**己部**提供建築事務監督所要求的詳情。
where the **Class II** minor works detailed in **Part A** involve the erection of a signboard, confirm that the person for whom the signboard is to be erected has provided the particulars of the person as required by the Building Authority in **Part F**.

（只在早前已獲分配相關呈交編號的文件不能繼續處理時適用）
(Only applicable where the previous submission with Minor Works Submission Number assigned cannot be further processed)

MW 1 2 0 3 9 9 9 9 9
早前相關的小型工程呈交編號
Previously Related Minor Works Submission Number

簽桂仁
獲授權簽署人之中文姓名* Name in Chinese of the authorized signatory*

CIM CYU YAN
獲授權簽署人之英文姓名* Name in English of the authorized signatory*

MWC 4 5 6 7 9 0 / 2 0 1 1
註冊證明書編號*
Certificate of Registration Number*

2 1 2 3 4 5 6 3
傳真號碼* Fax Number*

2 1 2 3 4 5 6 2
聯絡電話 Contact Number

☑ 願意接收短訊通知
Willing to receive Short Messaging Service (SMS) Notification

註冊屆滿日期* Date of expiry of registration*: 0 4 0 7 20 1 4
日 月 年
day month year

簽名
訂明註冊承建商（獲授權簽署人）簽署*
Signature* of the prescribed registered contractor (authorized signatory)

0 4 0 7 20 1 2
日 月 年
day month year

COMPLETED BY THE PRESCRIBED REGISTERED CONTRACTOR

SAMPLE

* *根據註冊記錄 In accordance with the registration record*

COMPLETED BY THE PERSON FOR WHOM THE SIGNBOARD IS TO BE ERECTED

己部 由他人代為豎設招牌的人士的詳情
Part F *（只在工程涉及豎設招牌時適用，並由他人代為豎設招牌的人士填寫）*
Particulars of the person for whom the signboard is to be erected
(Only applicable to works involving the erection of a signboard and to be completed by the person for whom the signboard is to be erected)

喜招牌
中文名稱 Name in Chinese

SIGNBOARD OWNER
英文名稱 *（如有，姓氏先行）* Name in English *(Surname first, if any)*

英文名稱 *（如有，姓氏先行）（續）* Name in English *(Surname first, if any) (Cont'd)*

84503832
☐ 香港身份證號碼 HKID Number ☑ 商業登記號碼 Business Registration Number ☐ 護照號碼 Passport Number

☐ 其他 *（請註明）* Others *(Please specify)*

護照簽發國家 *（如適用）* Country of issue of passport *(If applicable)*

通訊地址 ***（如與甲 1 部份相同，則不用填寫）***
Correspondence Address ***(Not required to complete if same as Part A1)***

傳真號碼 Fax Number: 29934568
聯絡電話 Contact Number: 29934567

電郵地址 E-mail Address

喜招牌

由他人代為豎設招牌的人士 簽署 *（如適用）* 蓋上公司印鑑
Signature of the person for whom the signboard is to be erected & affixed with company seal *(if applicable)*

日 *day* 04 月 *month* 07 年 *year* 2012

COMPLETED BY THE AUTHORIZED PERSON OR REGISTERED INSPECTOR

庚部 當進行的工程可能涉及公用地方時，相關業主立案法團或物業管理公司的詳情
Part G *（只在工程可能涉及公用地方時適用，並由已獲委任的認可人士或註冊檢驗人員填寫）*
Particulars of the corresponding Owners' Corporations or Property Management Company where the works to be carried out may involve common parts
(Only applicable where the works to be carried out may involve common parts and to be completed by the authorized person or registered inspector appointed)

業主立案法團或物業管理公司 名稱及其通訊地址
Name & Correspondence Address of Owners' Corporations or Property Management Company

INCORPORATED OWNERS OF XYZ MANSION
6/F, XYZ MANSION,
456 SOY STREET,
KOWLOON

傳真號碼 Fax Number: 26634568
聯絡電話 Contact Number: 26634567

電郵地址 E-mail Address

SAMPLE MW01

簡化規定下的小型工程完工證明書（有委任訂明建築專業人士）
CERTIFICATE OF COMPLETION OF MINOR WORKS UNDER THE SIMPLIFIED REQUIREMENTS (WITH PRESCRIBED BUILDING PROFESSIONALS APPOINTED)

屋宇署 BUILDINGS DEPARTMENT

MW02

表格及所有證明文件最遲須在小型工程項目完工日期後 14 天內呈交
This form and all supporting document(s) must be submitted within 14 days after the date of completion of the minor works item(s)

請以正楷填寫表格，並在適當方格內加上『✓』號。填寫前，請仔細閱讀《注意事項》。
Please read the "Matters to Note", complete the form in BLOCK LETTERS and tick in the appropriate box(es).

致建築事務監督
To the Building Authority

甲部 認可人士或註冊檢驗人員的第 I 級別小型工程完工證明書
Part A *（由已獲委任的認可人士或註冊檢驗人員填寫）*
Certificate of completion of Class I minor works by the authorized person or registered inspector
(To be completed by the authorized person or registered inspector appointed)

MW 1 2 0 5 0 9 9 9 9
小型工程呈交編號
Minor Works Submission Number
必須填寫 MUST COMPLETE

本人 認可仁
中文姓名*Name in Chinese*

I, YUNG HO YAN,
英文姓名*Name in English*

根據《建築物（小型工程）規例》第 31 條、第 32 條及第 37 條的規定，
in accordance with the provisions of sections 31, 32 and 37 of the Building (Minor Works) Regulation,

1. 當已完成的**第 I 級別**小型工程有別於已呈交的訂明圖則及詳圖時，通知已完成的**第 I 級別**小型工程是有別於在上述呈交編號呈交文件內已呈交的訂明圖則及詳圖；在此呈交顯示已完成的**第 I 級別**小型工程的經修訂的訂明圖則及詳圖，而該等修訂已經詳列於**戊部**；確認在本部呈交的訂明圖則及詳圖，均由本人製備和簽署（作為已簽署有關圖則的人，本人同意為該等圖則負起《建築物條例》下的所有責任）；
where the completed **Class I** minor works are different from those shown in the submitted prescribed plans and details, notify that the **Class I** minor works as completed are different from the prescribed plans and details submitted before under the submission with the above mentioned submission number; submit herewith the revised prescribed plans and details showing the **Class I** minor works as completed and such revisions have been detailed in **Part E**; confirm that the prescribed plans and details submitted under this part, have been prepared and signed by me (as the person who has signed the plans, I agree to assume all responsibilities under the Buildings Ordinance regarding the plans);
2. 核證所有在上述呈交編號呈交文件內的**第 I 級別**小型工程，已按照《建築物條例》及已呈交的訂明圖則及詳圖進行；
certify that all the **Class I** minor works under the submission with the above mentioned submission number have been carried out in accordance with the Buildings Ordinance and the submitted prescribed plans and details;
3. 確認所有**第 I 級別**小型工程已於 24 07 2012 完成；
confirmed that all the **Class I** minor works were completed on 日 *day* 月 *month* 年 *year*;
4. 現呈交顯示所有已完成的**第 I 級別**小型工程的照片；
submit herewith photographs showing all the **Class I** minor works as completed;
5. 當已完成的**第 I 級別**小型工程不屬拆卸工程時，核證本人認為所有已完成的**第 I 級別**小型工程在結構上是安全的；及
where the completed **Class I** minor works are other than demolition works, certify that, in my opinion, all the completed **Class I** minor works are structurally safe; and
6. 當已完成的**第 I 級別**小型工程屬拆卸工程時，核證本人認為所有受上述**第 I 級別**小型工程影響的任何土地或街道有足夠安全度，且在有關的處所尚餘的任何構築物在結構上是安全的。
where the completed **Class I** minor works are demolition works, certify that, in my opinion, any land or street affected by the said **Class I** minor works has an adequate margin of safety and any structure remaining on the premises is structurally safe.

COMPLETED BY THE AUTHORIZED PERSON OR REGISTERED INSPECTOR

傳真號碼* Fax Number* 2 1 2 3 4 5 6 6
聯絡電話 Contact Number 2 1 2 3 4 5 6 5
☑ 願意接收短訊通知 Willing to receive Short Messaging Service (SMS) Notification

註冊證明書編號* Certificate of Registration Number* A P(A) 9 9 9 9 / 9 9

註冊屆滿日期* Date of expiry of registration* 04 07 2013 日 *day* 月 *month* 年 *year*

認可仁
認可人士或註冊檢驗人員 簽署* Signature* of the authorized person or registered inspector

27 07 2012 日 *day* 月 *month* 年 *year*

* *根據註冊記錄 In accordance with the registration record*

SAMPLE MW02

2012/06 Replaced

COMPLETED BY THE REGISTERED STRUCTURAL ENGINEER

乙部　註冊結構工程師的第 I 級別小型工程完工證明書 *（由已獲委任的註冊結構工程師填寫）*
Part B Certificate of completion of Class I minor works by the registered structural engineer
(To be completed by the registered structural engineer appointed)

本人 恭晴司
中文姓名*Name in Chinese*

I, GUNG CHI SZE,
英文姓名*Name in English*

根據《建築物（小型工程）規例》第 31 條、第 32 條及第 37 條的規定，
in accordance with the provisions of sections 31, 32 and 37 of the Building (Minor Works) Regulation,

1. 當已完成的**第 I 級別**小型工程有別於已呈交的訂明圖則及詳圖時，確認在**甲部**呈交的經修訂的訂明圖則及詳圖內的基礎圖則、結構詳圖或計算資料，均由本人製備和簽署（作為已簽署有關圖則的人，本人同意為該等圖則負起《建築物條例》下的所有責任）；
where the completed **Class I** minor works are different from those shown in the submitted prescribed plans and details, confirm that the foundation plans, structural details or calculations submitted under the revised prescribed plans and details in **Part A**, have been prepared and signed by me (as the person who has signed the plans, I agree to assume all responsibilities under the Buildings Ordinance regarding the plans);
2. 核證所有在上述呈交編號呈交文件內的**第 I 級別**小型工程，已按照《建築物條例》及已呈交的訂明圖則及詳圖進行；
certify that all the **Class I** minor works under the submission with the above mentioned submission number have been carried out in accordance with the Buildings Ordinance and the submitted prescribed plans and details;
3. 當已完成的**第 I 級別**小型工程不屬拆卸工程時，核證本人認為所有已完成的**第 I 級別**小型工程在結構上是安全的；及
where the completed **Class I** minor works are other than demolition works, certify that, in my opinion, all the completed **Class I** minor works are structurally safe; and
4. 當已完成的**第 I 級別**小型工程屬拆卸工程時，核證本人認為所有受上述**第 I 級別**小型工程影響的任何土地或街道有足夠安全度，且在有關的處所尚餘的任何構築物在結構上是安全的。
where the completed **Class I** minor works are demolition works, certify that, in my opinion, any land or street affected by the said **Class I** minor works has an adequate margin of safety and any structure remaining on the premises is structurally safe.

RSE 8888/88
註冊證明書編號*
Certificate of Registration Number*

2123456 4
聯絡電話 Contact Number

註冊屆滿日期* Date of expiry of registration* 04 07 20 13
日 月 年
day month year

恭晴司
註冊結構工程師 簽署*
Signature* of the registered structural engineer

27 07 20 12
日 月 年
day month year

COMPLETED BY THE REGISTERED GEOTECHNICAL ENGINEER

丙部　註冊岩土工程師的第 I 級別小型工程完工證明書 *（由已獲委任的註冊岩土工程師填寫）*
Part C Certificate of completion of Class I minor works by the registered geotechnical engineer
(To be completed by the registered geotechnical engineer appointed)

本人
中文姓名*Name in Chinese*

I,
英文姓名*Name in English*

根據《建築物（小型工程）規例》第 31 條、第 32 條及第 37 條的規定，
in accordance with the provisions of sections 31, 32 and 37 of the Building (Minor Works) Regulation,

1. 當已完成的**第 I 級別**小型工程有別於已呈交的訂明圖則及詳圖時，確認在**甲部**呈交的經修訂的訂明圖則及詳圖內的岩土圖則、岩土評估、岩土詳圖或計算資料及岩土報告，均由本人製備和簽署（作為已簽署有關圖則的人，本人同意為該等圖則負起《建築物條例》下的所有責任）；
where the completed **Class I** minor works are different from those shown in the submitted prescribed plans and details, confirm that the geotechnical plans, geotechnical assessment, geotechnical details or calculations and geotechnical reports submitted under the revised prescribed plans and details in **Part A**, have been prepared and signed by me (as the person who has signed the plans, I agree to assume all responsibilities under the Buildings Ordinance regarding the plans);
2. 核證所有在上述呈交編號呈交文件內的**第 I 級別**小型工程，已按照《建築物條例》及已呈交的訂明圖則及詳圖進行；
certify that all the **Class I** minor works under the submission with the above mentioned submission number have been carried out in accordance with the Buildings Ordinance and the submitted prescribed plans and details;
3. 當已完成的**第 I 級別**小型工程不屬拆卸工程時，核證本人認為所有已完成的**第 I 級別**小型工程在岩土方面是安全的；及
where the completed **Class I** minor works are other than demolition works, certify that, in my opinion, all the completed **Class I** minor works are geotechnically safe; and
4. 當已完成的**第 I 級別**小型工程屬拆卸工程時，核證本人認為所有受上述**第 I 級別**小型工程影響的任何土地或街道有足夠安全度，且在有關的處所尚餘的任何構築物在岩土方面是安全的。
where the completed **Class I** minor works are demolition works, certify that, in my opinion, any land or street affected by the said **Class I** minor works has an adequate margin of safety and any structure remaining on the premises is geotechnically safe.

RGE /
註冊證明書編號*
Certificate of Registration Number*

聯絡電話 Contact Number

註冊屆滿日期* Date of expiry of registration* 20
日 月 年
day month year

註冊岩土工程師 簽署*
Signature* of the registered geotechnical engineer

20
日 月 年
day month year

* *根據註冊記錄 In accordance with the registration record*

Optional Page - To be submitted when any parts is completed

SAMPLE MW02

2012/06 Replaced

丁部　訂明註冊承建商的工程完工證明書 *（由已獲委任的訂明註冊承建商填寫）*
Part D Certificate of completion of works by the prescribed registered contractor
(To be completed by the prescribed registered contractor appointed)

我們 公私牌戎建雙工程有限公司
中文名稱* Name in Chinese*

We, GUNG SI PAI SING GIN SOENG ENGINEERING COMPANY
英文名稱* Name in English*

LIMITED,
英文名稱* *（續）* Name in English* *(Cont'd)*

根據《建築物（小型工程）規例》第 31 條、第 32 條、第 34 條及第 35 條 *（當涉及**第 II 級別**小型工程時）*、第 36 條 *（當涉及**第 III 級別**小型工程時）*、及第 37 條 *（當已完成的**第 II 級別**小型工程有別於已呈交的訂明圖則及詳圖或當涉及**第 III 級別**小型工程圖則時）* 的規定，
in accordance with the provisions of sections 31, 32, 34 and 35 *(where **Class II** minor works are involved)*, 36 *(where **Class III** minor works are involved)*, and 37 *(where the completed **Class II** minor works are different from those shown in the submitted prescribed plans and details or where plans of **Class III** minor works are involved)* of the Building (Minor Works) Regulation,

當已完成的工程涉及第 II 級別小型工程時　Where Class II minor works are involved in the completed works

1. 當已完成的**第 II 級別**小型工程有別於已呈交的訂明圖則及詳圖時，通知已完成的**第 II 級別**小型工程是有別於在上述呈交編號內已呈交的訂明圖則及詳圖；在此呈交顯示已完成的**第 II 級別**小型工程的經修訂的訂明圖則及詳圖，而該等修訂已經詳列於**己部**；確認在本部呈交的訂明圖則及詳圖，均由我們製備和簽署（作為已簽署有關圖則的人，我們同意為該等圖則負起《建築物條例》下的所有責任）；
   where the completed **Class II** minor works are different from those shown in the submitted prescribed plans and details, notify that the **Class II** minor works as completed are different from the prescribed plans and details submitted before under the above mentioned submission number; submit herewith the revised prescribed plans and details showing the **Class II** minor works as completed and such revisions have been detailed in **Part F**; confirm that the prescribed plans and details submitted under this part, have been prepared and signed by us (as the person who has signed the plans, we agree to assume all responsibilities under the Buildings Ordinance regarding the plans);
2. 確認所有**第 II 級別**小型工程已於**甲部**第 3 段所述同日完成；
   confirmed that all the **Class II** minor works were completed on the same date as stated in paragraph 3 of **Part A**;
3. 現呈交顯示所有已完成的**第 II 級別**小型工程的照片；
   submit herewith photographs showing all the **Class II** minor works as completed;
4. 當已完成的**第 II 級別**小型工程不屬拆卸工程時，核證我們認為所有已完成的**第 II 級別**小型工程在結構上是安全的；
   where the completed **Class II** minor works are other than demolition works, certify that, in our opinion, all the completed **Class II** minor works are structurally safe;
5. 當已完成的**第 II 級別**小型工程屬拆卸工程時，核證我們認為所有受上述**第 II 級別**小型工程影響的任何土地或街道有足夠安全度，且在有關的處所尚餘的任何構築物在結構上是安全的；
   where the completed **Class II** minor works are demolition works, certify that, in our opinion, any land or street affected by the said **Class II** minor works has an adequate margin of safety and any structure remaining on the premises is structurally safe;

當已完成的工程涉及第 III 級別小型工程時　Where Class III minor works are involved in the completed works

6. 確認我們已獲委任為**庚部**所述工程的訂明註冊承建商；
   confirm that we have been appointed as the prescribed registered contractor of the works detailed in **Part G**;
7. 確認**庚部**所述工程的展開日期與同一呈交編號呈交文件內的其他工程相同，並已於**甲部**第 3 段所述同日完成；
   confirm that the works detailed in **Part G** had been commenced on the same date together with other works under the submission with the same minor works submission number and were completed on the same date as stated in paragraph 3 of **Part A**;
8. 現呈交顯示有關的處所在緊接**庚部**所述的工程展開前及完工後的實際狀況的照片，及顯示已完成工程的圖則或工程描述；
   submit herewith the photographs showing the physical condition of the premises immediately before the commencement and after the completion of the works detailed in **Part G**, and the plans or description of works showing the works as completed;
9. 確認在**本部**呈交的圖則或工程描述，均由我們製備和簽署（作為已簽署有關圖則的人，我們同意為該等圖則負起《建築物條例》下的所有責任）；
   confirm that the plans or description of work submitted under **this part**, have been prepared and signed by us (as the person who has signed the plans, we agree to assume all responsibilities under the Buildings Ordinance regarding the plans);
10. 當**庚部**所述的**第 III 級別**小型工程涉及豎設招牌時，確認由他人代為豎設招牌的人士已在**辛部**提供建築事務監督所要求的詳情；及
    where the **Class III** minor works detailed in **Part G** involve the erection of a signboard, confirm that the person for whom the signboard is to be erected has provided the particulars of the person as required by the Building Authority in **Part H**; and

11. 核證所有在上述呈交編號呈交文件內的所有小型工程，已按照《建築物條例》、已呈交的訂明圖則及詳圖、及（如適用）圖則或工程描述進行。
    certify that all the minor works under the submission with the above mentioned submission number have been carried out in accordance with the Buildings Ordinance, the submitted prescribed plans and details, and plans or description of works (if applicable).

簽程仁
獲授權簽署人之中文姓名* Name in Chinese of the authorized signatory*

CIM CYU YAN
獲授權簽署人之英文姓名* Name in English of the authorized signatory*

MWC 4567 90/2011
註冊證明書編號*
Certificate of Registration Number*

註冊屆滿日期* Date of expiry of registration*: 04 07 2014
日 月 年
day month year

2123 4563
傳真號碼* Fax Number*

2123 4562
聯絡電話 Contact Number

☑ 願意接收短訊通知
Willing to receive Short Messaging Service (SMS) Notification

簽名
訂明註冊承建商（獲授權簽署人）簽署*
Signature* of the prescribed registered contractor (authorized signatory)

27 07 2012
日 月 年
day month year

COMPLETED BY THE PRESCRIBED REGISTERED CONTRACTOR

*　*根據註冊記錄 In accordance with the registration record*

COMPLETED BY THE AUTHORIZED PERSON OR REGISTERED INSPECTOR

戊部 已完成第 I 級別小型工程的修訂
Part E *（只在已完成的第 I 級別小型工程有別於已呈交的訂明圖則及詳圖時適用，並由已獲委任的認可人士或註冊檢驗人員填寫）*
Revisions of the completed Class I minor works
(Only applicable where the completed Class I minor works are different from those shown in the submitted prescribed plans and details and to be completed by the authorized person or registered inspector appointed)

☐ 另加附加頁 張
Additional __Page added

小型工程項目 Minor works Item	描述 Description	有關差別的描述 Description of the differences
1.2	FORMATION OF SLAB OPENING (1.5m X 1.4m) BETWEEN FLAT A ON 1/F. & FLAT A ON 2/F.	REDUCTION OF DIMENSION OF OPENING FROM 1.5m TO 1.4m.

「有關差別的描述」請參閱《認可人士、註冊結構工程師及註冊岩土工程師作業備考》編號 APP-147。各項小型工程項目及其經修訂後的描述（包括性質、位置和數量）必須提供。如空位不敷應用，請另加紙張填寫，附於本通知書內，並在每頁加簽及註明日期。

Refer to Practice Note for Authorized Persons, Registered Structural Engineers and Registered Geotechnical Engineers No. APP-147 for the "Description of the differences". Every minor works item and its revised description (including the nature, location and quantity) shall be provided. If space is insufficient, please attach additional sheet(s) which must be signed and dated.

COMPLETED BY THE PRESCRIBED REGISTERED CONTRACTOR

己部 已完成第 II 級別小型工程的修訂
Part F *（只在已完成的第 II 級別小型工程有別於已呈交的訂明圖則及詳圖時適用，並由已獲委任的訂明註冊承建商填寫）*
Revisions of the completed Class II minor works
(Only applicable where the completed Class II minor works are different from those shown in the submitted prescribed plans and details, and to be completed by the prescribed registered contractor appointed)

☐ 另加附加頁 張
Additional __Page added

小型工程項目 Minor works Item	描述 Description	有關差別的描述 Description of the differences
2.18	ERECTION OF PROJECTING SIGNBOARD WITH DISPLAY AREA OF 8.5m², NOT CONSIST OF STONE, ON EXTERNAL WALL OF FLAT A FROM 1/F TO 2/F FACING SOY STREET	REDUCTION OF DISPLAY AREA FROM 10m² TO 8.5m²

「有關差別的描述」請參閱《註冊承建商作業備考》編號 71。各項小型工程項目及其經修訂後的描述（包括性質、位置和數量）必須提供。如空位不敷應用，請另加紙張填寫，附於本通知書內，並在每頁加簽及註明日期。

Refer to the Practice Note for Registered Contractors No.71 for the "Descriptions of the differences". Every minor works item and its revised description (including the nature, location and quantity) shall be provided. If space is insufficient, please attach additional sheet(s) which must be signed and dated.

SAMPLE MW02

2012/06 Replaced

Optional Page - To be submitted when any parts is completed

庚部　第 III 級別小型工程的訂明註冊承建商委任通知

Part G *（只在涉及第 III 級別小型工程時適用，並由安排進行小型工程的人填寫）*

Notice of appointment of the prescribed registered contractor for Class III minor works

(Only applicable where Class III minor works are involved, and to be completed by the person who arranged for the minor works to be carried out)

本人/我們 請仁造
中文名稱 Name in Chinese

I/We, CHING YAN CHO
英文名稱 *（如有，姓氏先行）* Name in English *(Surname first, if any)*

,
英文名稱 *（如有，姓氏先行）（續）* Name in English *(Surname first, if any) (Cont'd)*

為上述呈交編號呈交文件內安排進行小型工程的人，根據《建築物（小型工程）規例》第 28 條的規定，本人/我們已委任上述呈交編號呈交文件內已獲委任的訂明註冊承建商，作為本部所述工程的訂明註冊承建商。

am/are the person who arranged for the minor works to be carried out detailed in the submission with the above mentioned submission number, in accordance with the provisions of section 28 of the Building (Minor Works) Regulation, I/we have appointed the prescribed registered contractor appointed under the submission with the above mentioned submission number, as prescribed registered contractor in respect of the works detailed in this part.

在上述呈交編號呈交文件內相同位置或地址已完成的第 III 級別小型工程的詳情

Details of the Class III minor works completed at the same location or address of the submission with the above mentioned submission number

☐ 另加附加頁　張
Additional __ Page added

小型工程項目 Minor works Item	描述 Description	（如有）請提供相關命令 / 指示 / 通知 / 屋宇署檔案 編號 Relevant Order / Direction / Notice / BD Reference Number (if available)
3.16	ERECTION OF PROJECTING SIGNBOARD DOES NOT CONSIST OF STONE, WITH DISPLAY AREA OF 1 m^2 ERECTED ON THE EXTERNAL WALL OF FLAT A FROM 1/F TO 2/F FACING SOY STREET	

各項小型工程項目及其描述（包括性質、位置和數量）必須提供。如空位不敷應用，請另加紙張填寫，附於本通知書內，並在每頁加簽、註明日期及 *（如適用）* 蓋上公司印鑑。

Every minor works item and its description (including the nature, location and quantity) shall be provided. If space is insufficient, please attach additional sheet(s) which must be signed, dated and affixed with company seal *(if applicable)*.

請仁造

安排進行小型工程的人 簽署 *（如適用）* 蓋上公司印鑑
Signature of the person who arranged for the minor works to be carried out & affixed with company seal *(if applicable)*

27 07 2012
日 月 年
day month year

COMPLETED BY THE PERSON WHO ARRANGED FOR THE MINOR WORKS TO BE CARRIED OUT

SAMPLE MW02

Optional Page - To be submitted when any parts is completed

COMPLETED BY THE PERSON FOR WHOM THE SIGNBOARD IS TO BE ERECTED

辛部 由他人代為豎設招牌的人士的詳情
Part H *（只在已完成的第 III 級別小型工程涉及豎設招牌時適用，並由他人代為豎設招牌的人士填寫）*
Particulars of the person for whom the signboard is to be erected
(Only applicable to the completed Class III minor works involving the erection of a signboard and to be completed by the person for whom the signboard is to be erected)

☑ **當由他人代為豎設招牌的人士的詳情已在上述呈交編號呈交文件內的 MW01 表格內提供時**
Where the particulars of the person for whom the signboard is to be erected had been provided in the Form MW01 submitted under the submission with the above mentioned submission number

本人/我們 喜招牌
中文名稱 Name in Chinese

I/We, SIGNBOARD OWNER
英文名稱 *（如有，姓氏先行）* Name in English *(Surname first, if any)*

英文名稱 *（如有，姓氏先行）（續）* Name in English *(Surname first, if any) (Cont'd)*

為上述呈交編號呈交文件內由他人代為豎設招牌的人士，現按照《建築物（小型工程）規例》第 36(a)(v)條的規定，確認本人/我們亦同時是**庚部**所述工程的由他人代為豎設招牌的人士，而本人的詳情已在上述呈交編號呈交文件內提供。
am/are the person for whom the signboard is to be erected detailed in the submission with the above mentioned submission number, in accordance with the provisions of section 36(a)(v) of the Building (Minor Works) Regulation, hereby confirm that I am/we are also the person for whom the signboard is to be erected detailed in **Part G**, and my particulars had been provided in the submission with the above mentioned submission number.

中文名稱 Name in Chinese

英文名稱 *（如有，姓氏先行）* Name in English *(Surname first, if any)*

英文名稱 *（如有，姓氏先行）（續）* Name in English *(Surname first, if any) (Cont'd)*

☐ 香港身份證號碼 HKID Number ☐ 商業登記號碼 Business Registration Number ☐ 護照號碼 Passport Number
☐ 其他 *（請註明）* Others *(Please specify)*

護照簽發國家 *（如適用）* Country of issue of passport *(If applicable)*

通訊地址 Correspondence Address

傳真號碼 Fax Number

聯絡電話 Contact Number

電郵地址 E-mail Address

喜招牌

由他人代為豎設招牌的人士 簽署 *（如適用）* 蓋上公司印鑑
Signature of the person for whom the signboard is to be erected & affixed with company seal *(if applicable)*

27 07 2012
日 月 年
day month year

SAMPLE MW02

Optional Page - To be submitted when any parts is completed

屋宇署 BUILDINGS DEPARTMENT MW03

簡化規定下的小型工程展開通知書（沒有委任訂明建築專業人士）
NOTICE OF COMMENCEMENT OF MINOR WORKS UNDER THE SIMPLIFIED REQUIREMENTS (WITHOUT PRESCRIBED BUILDING PROFESSIONAL APPOINTED)

本表格及所有證明文件最遲須在展開小型工程項目前 7 天呈交
This form and all supporting document(s) must be submitted not less than 7 days before the commencement of the minor works item(s)

請以正楷填寫表格，並在適當方格內加上『✓』號。填寫前，請仔細閱讀《注意事項》。
Please read the "Matters to Note", complete the form in BLOCK LETTERS and tick in the appropriate box(es).

致建築事務監督
To the Building Authority

只供屋宇署填寫 For Buildings Department's Use only
小型工程呈交編號 →
Minor Works Submission Number

甲部 獲委任訂明註冊承建商的委任通知 *（由安排進行小型工程的人填寫）*
Part A Notice of appointment of the appointed prescribed registered contractor
(To be completed by the person who arranged for the minor works to be carried out)

1. 擬進行小型工程的位置或地址
Location or Address of the proposed minor works to be carried out

EXTERNAL WALL ON 1-2/F FACING SOY STREET,
XYZ MANSION,
456 SOY STREET,
KOWLOON

徵收差餉及/或地租通知書左上角的帳目編號
The Account Number printed on the top left-hand corner of the Demand for Rates and/or Government Rent
1 2 3 4 5 6 7 8 9 1 2 3 4 5 6 7 8 9 0
為方便確定工程位置或地址，可選擇提供
Optional for easy identification of the location or address of the works

2. 擬進行的小型工程的詳情
Details of the proposed minor works to be carried out

☐ 另加附加頁 張
Additional __ Page added

小型工程項目 Minor works Item	描述 Description	（如有）請提供相關命令 / 指示 / 通知 / 屋宇署檔案 編號 Relevant Order / Direction / Notice / BD Reference Number (if available)
2.19	ALTERATION OF EXISTING WALL SIGNBOARD	
	COMPRISING A DISPLAY SYSTEM WITH LIGHT	
	EMITTING DIODES WITH DISPLAY AREA OF 9 M^2	
	ERECTED ON THE EXTERNAL WALL OF 1-2/F FACING	
	SOY STREET	

各項小型工程項目及其描述（包括性質、位置和數量）必須提供。如空位不敷應用，請另加紙張填寫，附於本通知書內，並在每頁加簽、註明日期及*（如適用）*蓋上公司印鑑。
Every minor works item and its description (including the nature, location and quantity) shall be provided. If space is insufficient, please attach additional sheet(s) which must be signed, dated and affixed with company seal *(if applicable)*.

3. 獲委任訂明註冊承建商的資料
Particulars of the appointed prescribed registered contractor

根據《建築物（小型工程）規例》第 28 條的規定，本人/我們已就本部所述工程委任下述的訂明註冊承建商。
In accordance with the provisions of section 28 of the Building (Minor Works) Regulation, I/we have appointed the prescribed registered contractor as below in respect of the works detailed in this Part.

大 輝 成 建 雙 建 築 有 限 公 司
訂明註冊承建商中文名稱*Name in Chinese of the prescribed registered contractor*

ABC 456789/2009
註冊證明書編號*
Certificate of Registration Number*

TAI PAI SING GIN SOENG CONSTRUCTION COMPANY
訂明註冊承建商英文名稱* Name in English of the prescribed registered contractor*

LIMITED
訂明註冊承建商英文名稱*（續）* Name in English of the prescribed registered contractor*(Cont'd)*

* *根據註冊記錄 In accordance with the registration record*

COMPLETED BY THE PERSON WHO ARRANGED FOR THE MINOR WORKS TO BE CARRIED OUT

2012/06 Replaced

SAMPLE MW03

COMPLETED BY THE PERSON WHO ARRANGED FOR THE MINOR WORKS TO BE CARRIED OUT

4. 安排進行小型工程的人的詳情
Particulars of the person who arranged for the minor works to be carried out

請 仁 造
中文名稱 Name in Chinese

CHING YAN CHO
英文名稱 *(如有，姓氏先行)* Name in English *(Surname first, if any)*

英文名稱 *(如有，姓氏先行)(續)* Name in English *(Surname first, if any) (Cont'd)*

A123456(7)

☑ 香港身份證號碼 HKID Number ☐ 商業登記號碼 Business Registration Number ☐ 護照號碼 Passport Number

☐ 其他 *(請註明)* Others *(Please specify)*

護照簽發國家 *(如適用)* Country of issue of passport *(If applicable)*

通訊地址 *(如與甲 1 部份相同，則不用填寫)*
Correspondence Address *(Not required to complete if same as Part A1)*

FLAT B, 11/F.,
ABC BUILDING,
789 KWUN TONG ROAD,
KWUN TONG, KOWLOON

21234568
傳真號碼 Fax Number

21234567
聯絡電話 Contact Number

cengyanzou@email.com
電郵地址 E-mail Address

請 仁 造

安排進行小型工程的人 簽署 *(如適用)* 蓋上公司印鑑
Signature of the person who arranged for the minor works to be carried out & affixed with company seal *(if applicable)*

30 06 2012
日 月 年
day month year

SAMPLE MW03

2012/06 Newly Added

乙部　訂明註冊承建商的委任確認書 *（由已獲委任的訂明註冊承建商填寫）*
Part B Confirmation of appointment by the prescribed registered contractor
(To be completed by the prescribed registered contractor appointed)

我們 大牌成建雙建築有限公司
中文名稱* Name in Chinese*

We, TAI PAI SING GIN SOENG CONSTRUCTION COMPANY
英文名稱* Name in English*

LIMITED,
英文名稱* *（續）* Name in English* *(Cont'd)*

根據《建築物（小型工程）規例》第 33 條及第 37 條的規定，
in accordance with the provisions of sections 33 and 37 of the Building (Minor Works) Regulation,

1. 確認我們已獲委任為**甲部**所述工程的訂明註冊承建商；
   confirm that we have been appointed as the prescribed registered contractor of the works detailed in **Part A**;

2. 確認**甲部**所述工程將於 07 07 2012 展開；
   confirm that the works detailed in **Part A** are to be commenced on 07 07 2012 (日 day 月 month 年 year);

3. 現呈交顯示**甲部**所述工程的訂明圖則及詳圖，和處所實際狀況的照片；
   submit herewith the prescribed plans and details of the works detailed in **Part A**, and the photographs showing the physical condition of the premises where the minor works detailed in **Part A** are to be carried out;

4. 確認在本部呈交的訂明圖則及詳圖，均由我們製備和簽署（作為已簽署有關圖則的人，我們同意為該等圖則負起《建築物條例》下的所有責任）；
   confirm that the prescribed plans and details submitted under this Part, have been prepared and signed by us (as the person who has signed the plans, we agree to assume all responsibilities under the Buildings Ordinance regarding the plans);

5. 當**甲部**所述工程包括對任何建築物進行修葺、改動或加建時，已核證以下事宜：在檢查該建築物後，我們認為該建築物有能力承受因**第 II 級別**小型工程而可能有所增加或在任何方面有所改動的荷載及應力；及
   where the works detailed in **Part A** comprise repairs, alterations or additions to any building, certified that, after inspecting the building, we are of the opinion that the building is capable of bearing the loads and stresses which may be increased or altered in any way as a result of the **Class II** minor works; and

6. 當**甲部**所述工程涉及豎設招牌時，確認由他人代為豎設招牌的人士已在**丙部**提供建築事務監督所要求的詳情。
   where the works detailed in **Part A** involve the erection of a signboard, confirm that the person for whom the signboard is to be erected has provided the particulars of the person as required by the Building Authority in **Part C**.

（只在早前已獲分配相關呈交編號的文件不能繼續處理時適用）
(Only applicable where the previous submission with Minor Works Submission Number assigned cannot be further processed)

MW
早前相關的小型工程呈交編號
Previously Related Minor Works Submission Number

授權仁
獲授權簽署人之中文姓名* Name in Chinese of the authorized signatory*

AUTHORIZED SIGNATORY
獲授權簽署人之英文姓名* Name in English of the authorized signatory*

ABC 456789/2009
註冊證明書編號*
Certificate of Registration Number*

2666612234
傳真號碼* Fax Number*

2666612235
聯絡電話 Contact Number

☑ 願意接收短訊通知
Willing to receive Short Messaging Service (SMS) Notification

註冊屆滿日期* 31 01 2013
Date of expiry of registration* (日 day 月 month 年 year)

A. Signatory
訂明註冊承建商（獲授權簽署人）簽署*
Signature* of the prescribed registered contractor (authorized signatory)

30 06 2012
日 day 月 month 年 year

COMPLETED BY THE PRESCRIBED REGISTERED CONTRACTOR

SAMPLE MW03

* *根據註冊記錄 In accordance with the registration record*

COMPLETED BY THE PERSON FOR WHOM THE SIGNBOARD IS TO BE ERECTED

丙部 由他人代為豎設招牌的人士的詳情
Part C *（只在工程涉及豎設招牌時適用，並由他人代為豎設招牌的人士填寫）*
Particulars of the person for whom the signboard is to be erected
(Only applicable to works involving the erection of a signboard and to be completed by the person for whom the signboard is to be erected)

喜招牌
中文名稱 Name in Chinese

SIGNBOARD OWNER
英文名稱 *（如有，姓氏先行）* Name in English *(Surname first, if any)*

英文名稱 *（如有，姓氏先行）（續）* Name in English *(Surname first, if any) (Cont'd)*

84503832
☐ 香港身份證號碼 HKID Number ☑ 商業登記號碼 Business Registration Number ☐ 護照號碼 Passport Number

☐ 其他 *（請註明）* Others *(Please specify)*

護照簽發國家 *（如適用）* Country of issue of passport *(If applicable)*

通訊地址 *（如與甲 1 部份相同，則不用填寫）*
Correspondence Address *(Not required to complete if same as Part A1)*

FLAT A, 1/F, AND 2/F,
XYZ MANSION,
456 SOY STREET,
KOWLOON

29934568
傳真號碼 Fax Number

29934567
聯絡電話 Contact Number

電郵地址 E-mail Address

喜招牌
由他人代為豎設招牌的人士 簽署 *（如適用）* 蓋上公司印鑑
Signature of the person for whom the signboard is to be erected & affixed with company seal *(if applicable)*

30 06 2012
日 月 年
day month year

COMPLETED BY THE PRESCRIBED REGISTERED CONTRACTOR

丁部 當進行的工程可能涉及公用地方時，相關業主立案法團或物業管理公司的詳情
Part D *（只在工程可能涉及公用地方時適用，並由已獲委任的訂明註冊承建商填寫）*
Particulars of the corresponding Owners' Corporations or Property Management Company where the works to be carried out may involve common parts
(Only applicable where the works to be carried out may involve common parts and to be completed by the prescribed registered contractor appointed)

業主立案法團或物業管理公司 名稱及其通訊地址
Name & Correspondence Address of Owners' Corporations or Property Management Company

INCORPORATED OWNERS OF XYZ MANSION
6/F, XYZ MANSION,
456 SOY STREET,
KOWLOON

26634568
傳真號碼 Fax Number

26634567
聯絡電話 Contact Number

電郵地址 E-mail Address

2012/06 Newly Added

Optional Page - To be submitted when any parts is completed

屋宇署 BUILDINGS DEPARTMENT

MW04

簡化規定下的小型工程完工證明書（沒有委任訂明建築專業人士）
CERTIFICATE OF COMPLETION OF MINOR WORKS UNDER THE SIMPLIFIED REQUIREMENTS (WITHOUT PRESCRIBED BUILDING PROFESSIONAL APPOINTED)

本表格及所有證明文件最遲須在小型工程項目完工日期後 14 天內呈交
This form and all supporting document(s) must be submitted within 14 days after the date of completion of the minor works item(s)

請以正楷填寫表格，並在適當方格內加上『✓』號。填寫前，請仔細閱讀《注意事項》。
Please read the "Matters to Note", complete the form in BLOCK LETTERS and tick in the appropriate box(es).

致建築事務監督
To the Building Authority

甲部　訂明註冊承建商的工程完工證明書 *（由已獲委任的訂明註冊承建商填寫）*
Part A Certificate of completion of works by the prescribed registered contractor
(To be completed by the prescribed registered contractor appointed)

MW 1 2 0 7 1 1 1 4 7
小型工程呈交編號
Minor Works Submission Number
必須填寫 MUST COMPLETE

我們 大牌戍建雙建築有限公司
中文名稱* Name in Chinese*

We, TAI PAI SING GIN SOENG CONSTRUCTION COMPANY
英文名稱* Name in English*

LIMITED,
英文名稱* *（續）* Name in English* *(Cont'd)*

根據《建築物（小型工程）規例》第 34 條、第 35 條，第 36 條 *（當涉及**第 III 級別**小型工程時）*，及第 37 條 *（當已完成的工程有別於已呈交的訂明圖則及詳圖或當涉及**第 III 級別**小型工程圖則時）* 的規定，
in accordance with the provisions of sections 34, 35, 36 *(where **Class III** minor works are involved)*, and 37 *(where the completed works are different from those shown in the submitted prescribed plans and details or where plans of **Class III** minor works are involved)* of the Building (Minor Works) Regulation,

1. 當已完成的**第 II 級別**小型工程有別於已呈交的訂明圖則及詳圖時，通知已完成的**第 II 級別**小型工程是有別於在上述呈交編號內已呈交的訂明圖則及詳圖；在此呈交顯示已完成的**第 II 級別**小型工程的經修訂的訂明圖則及詳圖，而該等修訂已經詳列於**乙部**；確認在本部呈交的訂明圖則及詳圖，均由我們製備和簽署（作為已簽署有關圖則的人，我們同意為該等圖則負起《建築物條例》下的所有責任）；
where the completed **Class II** minor works are different from those shown in the submitted prescribed plans and details, notify that the **Class II** minor works as completed are different from the prescribed plans and details submitted before under the above mentioned submission number; submit herewith the revised prescribed plans and details showing the **Class II** minor works as completed and such revisions have been detailed in **Part B**; confirm that the prescribed plans and details submitted under this part, have been prepared and signed by us (as the person who has signed the plans, we agree to assume all responsibilities under the Buildings Ordinance regarding the plans);

2. 確認所有**第 II 級別**小型工程已於 14 07 2012 完成；
confirmed that all the **Class II** minor works were completed on 日 *day* 月 *month* 年 *year*;

3. 現呈交顯示所有已完成的**第 II 級別**小型工程的照片；
submit herewith photographs showing all the **Class II** minor works as completed;

4. 當已完成的**第 II 級別**小型工程不屬拆卸工程時，核證我們認為所有已完成的**第 II 級別**小型工程在結構上是安全的；
where the completed **Class II** minor works are other than demolition works, certify that, in our opinion, all the completed **Class II** minor works are structurally safe;

5. 當已完成的**第 II 級別**小型工程屬拆卸工程時，核證我們認為所有受上述**第 II 級別**小型工程影響的任何土地或街道有足夠安全度，且在有關的處所尚餘的任何構築物在結構上是安全的；
where the completed **Class II** minor works are demolition works, certify that, in our opinion, any land or street affected by the said **Class II** minor works has an adequate margin of safety and any structure remaining on the premises is structurally safe;

當已完成的工程涉及第 III 級別小型工程時 Where Class III minor works are involved in the completed works

6. 確認我們已獲委任為**丙部**所述工程的訂明註冊承建商；
confirm that we have been appointed as the prescribed registered contractor of the works detailed in **Part C**;
7. 確認**丙部**所述工程的展開日期與同一呈交編號呈交文件內的其他工程相同，並已於第 2 段所述同日完成；
confirm that the works detailed in **Part C** had been commenced on the same date together with other works under the submission with the same minor works submission number and were completed on the same date as stated in paragraph 2;
8. 現呈交顯示有關的處所在緊接**丙部**所述的工程展開前及完工後的實際狀況的照片，及顯示已完成工程的圖則或工程描述；
submit herewith the photographs showing the physical condition of the premises immediately before the commencement and after the completion of the works detailed in **Part C**, and the plans or description of works showing the works as completed;
9. 確認在**本部**呈交的圖則或工程描述，均由我們製備和簽署（作為已簽署有關圖則的人，我們同意為該等圖則負起《建築物條例》下的所有責任）；
confirm that the plans or description of work submitted under **this part**, have been prepared and signed by us (as the person who has signed the plans, we agree to assume all responsibilities under the Buildings Ordinance regarding the plans);
10. 當**丙部**所述的**第 III 級別**小型工程涉及豎設招牌時，確認由他人代為豎設招牌的人士已在**丁部**提供建築事務監督所要求的詳情；及
where the **Class III** minor works detailed in **Part C** involve the erection of a signboard, confirm that the person for whom the signboard is to be erected has provided the particulars of the person as required by the Building Authority in **Part D**; and

COMPLETED BY THE PRESCRIBED REGISTERED CONTRACTOR

* *根據註冊記錄 In accordance with the registration record*

2012/06 Newly Added

11. 核證所有在上述呈交編號呈交文件內的所有小型工程，已按照《建築物條例》，已呈交的訂明圖則及詳圖、及（如適用）圖則或工程描述進行。
certify that all the minor works under the submission with the above mentioned submission number have been carried out in accordance with the Buildings Ordinance, the submitted prescribed plans and details, and plans or description of works (if applicable).

授權仁
獲授權簽署人之中文姓名* Name in Chinese of the authorized signatory*

AUTHORIZED SIGNATORY
獲授權簽署人之英文姓名* Name in English of the authorized signatory*

ABC 456789/2009
註冊證明書編號*
Certificate of Registration Number*

2666123 4
傳真號碼* Fax Number*

2666123 5
聯絡電話 Contact Number

☑ 願意接收短訊通知
Willing to receive Short Messaging Service (SMS) Notification

註冊屆滿日期* Date of expiry of registration* 31 01 2013 日 月 年 day month year

A. Signatory
訂明註冊承建商（獲授權簽署人）簽署*
Signature* of the prescribed registered contractor (authorized signatory)

18 07 2012 日 月 年 day month year

乙部 已完成第 II 級別小型工程的修訂 *(只在已完成的第 II 級別小型工程有別於已呈交的訂明圖則及詳圖時適用，並由已獲委任的訂明註冊承建商填寫)*
Part B Revisions of the completed Class II minor works
(Only applicable where the completed Class II minor works are different from those shown in the submitted prescribed plans and details, and to be completed by the prescribed registered contractor appointed)

☐ 另加附加頁 張
Additional __ Page added

小型工程項目 Minor works Item	描述 Description	有關差別的描述 Description of the differences
2.19	ALTERATION OF EXISTING WALL SIGNBOARD COMPRISING A DISPLAY SYSTEM WITH LIGHT EMITTING DIODES WITH DISPLAY AREA OF 9 m^2 ERECTED ON THE EXTERNAL WALL OF 1-2/F FACING SOY STREET TO 8 m^2	REDUCTION OF DISPLAY AREA FROM 9 M^2 TO 8 M^2.

「有關差別的描述」請參閱《註冊承建商作業備考》編號 71。各項小型工程項目及其經修訂後的描述（包括性質、位置和數量）必須提供。如空位不敷應用，請另加紙張填寫，附於本通知書內，並在每頁加簽及註明日期。
Refer to the Practice Note for Registered Contractors No.71 for the "Descriptions of the differences". Every minor works item and its revised description (including the nature, location and quantity) shall be provided. If space is insufficient, please attach additional sheet(s) which must be signed and dated.

COMPLETED BY THE PRESCRIBED REGISTERED CONTRACTOR

2012/06 Newly Added

* 根據註冊記錄 In accordance with the registration record

SAMPLE MW04

丙部 第 III 級別小型工程的訂明註冊承建商委任通知
Part C *（只在涉及第 III 級別小型工程時適用，並由安排進行小型工程的人填寫）*
Notice of appointment of the prescribed registered contractor for Class III minor works
(Only applicable where Class III minor works are involved, and to be completed by the person who arranged for the minor works to be carried out)

本人/我們 請仁造
中文名稱 Name in Chinese

I/We, CHING YAN CHO
英文名稱 *（如有，姓氏先行）* Name in English *(Surname first, if any)*

英文名稱 *（如有，姓氏先行）（續）* Name in English *(Surname first, if any) (Cont'd)*

為上述呈交編號呈交文件內安排進行小型工程的人，根據《建築物（小型工程）規例》第 28 條的規定，本人/我們已委任上述呈交編號呈交文件內已獲委任的訂明註冊承建商，作為本部所述工程的訂明註冊承建商。

am/are the person who arranged for the minor works to be carried out detailed in the submission with the above mentioned submission number, in accordance with the provisions of section 28 of the Building (Minor Works) Regulation, I/we have appointed the prescribed registered contractor appointed under the submission with the above mentioned submission number, as prescribed registered contractor in respect of the works detailed in this part.

在上述呈交編號呈交文件內相同位置或地址已完成的第 III 級別小型工程的詳情
Details of the Class III minor works completed at the same location or address of the submission with the above mentioned submission number

☐ 另加附加頁 張 Additional __ Page added

小型工程項目 Minor works Item	描述 Description	（如有） 請提供相關命令 / 指示 / 通知 / 屋宇署檔案 編號 Relevant Order / Direction / Notice / BD Reference Number (if available)
3.16	ERECTION OF PROJECTING SIGNBOARD DOES NOT CONSIST OF STONE, WITH DISPLAY AREA OF 1 M^2 ERECTED ON THE EXTERNAL WALL OF 1-2/F FACING SOY STREET	

各項小型工程項目及其描述（包括性質、位置和數量）必須提供。如空位不敷應用，請另加紙張填寫，附於本通知書內，並在每頁加簽、註明日期及 *（如適用）* 蓋上公司印鑑。

Every minor works item and its description (including the nature, location and quantity) shall be provided. If space is insufficient, please attach additional sheet(s) which must be signed, dated and affixed with company seal *(if applicable)*.

請仁造

安排進行小型工程的人 簽署 *（如適用）* 蓋上公司印鑑
Signature of the person who arranged for the minor works to be carried out & affixed with company seal *(if applicable)*

日 月 年
day month year
14 07 2012

COMPLETED BY THE PERSON WHO ARRANGED FOR THE MINOR WORKS TO BE CARRIED OUT

SAMPLE MW04

Optional Page - To be submitted when any parts is completed

2012/06 Newly Added

COMPLETED BY THE PERSON FOR WHOM THE SIGNBOARD IS TO BE ERECTED

丁部 由他人代為豎設招牌的人士的詳情
Part D *(只在已完成的第 III 級別小型工程涉及為某人豎設招牌時適用，並由他人代為豎設招牌的人士填寫)*
Particulars of the person for whom the signboard is to be erected
(Only applicable to the completed Class III minor works involving the erection of a signboard and to be completed by the person for whom the signboard is to be erected)

☑ 當由他人代為豎設招牌的人士的詳情已在上述呈交編號呈交文件內的 MW03 表格內提供時
Where the particulars of the person for whom the signboard is to be erected had been provided in the Form MW03 submitted under the submission with the above mentioned submission number

本人/我們 喜招牌
中文名稱 Name in Chinese

I/We, SIGNBOARD OWNER
英文名稱 *(如有，姓氏先行)* Name in English *(Surname first, if any)*

英文名稱 *(如有，姓氏先行)(續)* Name in English *(Surname first, if any) (Cont'd)*

為上述呈交編號呈交文件內由他人代為豎設招牌的人士，現按照《建築物(小型工程)規例》第 36(a)(v)條的規定，確認本人/我們亦同時是**丙部**所述工程的由他人代為豎設招牌的人士，而本人的詳情已在上述呈交編號的呈交文件內提供。
am/are the person for whom the signboard is to be erected detailed in the submission with the above mentioned submission number, in accordance with the provisions of section 36(a)(v) of the Building (Minor Works) Regulation, hereby confirm that I am/we are also the person for whom the signboard is to be erected detailed in **Part C**, and my particulars had been provided in the submission with the above mentioned submission number.

中文名稱 Name in Chinese

英文名稱 *(如有，姓氏先行)* Name in English *(Surname first, if any)*

英文名稱 *(如有，姓氏先行)(續)* Name in English *(Surname first, if any) (Cont'd)*

☐ 香港身份證號碼 HKID Number ☐ 商業登記號碼 Business Registration Number ☐ 護照號碼 Passport Number
☐ 其他 *(請註明)* Others *(Please specify)*

護照簽發國家 *(如適用)* Country of issue of passport *(If applicable)*

通訊地址 Correspondence Address

傳真號碼 Fax Number

聯絡電話 Contact Number

電郵地址 E-mail Address

SAMPLE MW04

喜招牌

由他人代為豎設招牌的人士 簽署 *(如適用)* 蓋上公司印鑑
Signature of the person for whom the signboard is to be erected & affixed with company seal *(if applicable)*

日 *day* 18 月 *month* 07 年 *year* 2012

Optional Page - To be submitted when any parts is completed

2012/06 Newly Added

屋宇署 BUILDINGS DEPARTMENT MW05

簡化規定下的第 III 級別小型工程完工通知及證明書
NOTICE AND CERTIFICATE OF COMPLETION OF CLASS III MINOR WORKS UNDER THE SIMPLIFIED REQUIREMENTS

本表格及所有證明文件最遲須在小型工程項目完工日期後 14 天內呈交
This form and all supporting document(s) must be submitted within 14 days after the date of completion of the minor works item(s)

請以正楷填寫表格，並在適當方格內加上『✓』號。填寫前，請仔細閱讀《注意事項》。
Please read the "Matters to Note", complete the form in BLOCK LETTERS and tick in the appropriate box(es).

致建築事務監督
To the Building Authority

只供屋宇署填寫 For Buildings Department's Use only
小型工程呈交編號 → Minor Works Submission Number

甲部 獲委任訂明註冊承建商的委任通知 *(由安排進行小型工程的人填寫)*
Part A Notice of appointment of the appointed prescribed registered contractor
(To be completed by the person who arranged for the minor works to be carried out)

MW
小型工程呈交編號
Minor Works Submission Number
(只在涉及豎設或改動招牌的工程並已獲分配呈交編號時適用)
(Only applicable to works relating to the erection or alteration of signboard with Minor Works Submission Number assigned)

1. 已完成小型工程的位置或地址
Location or Address of the completed minor works

GROUND FLOOR FACING TUNG MING STREET,
ABC CENTRE,
147 HONG NING ROAD,
KWUN TONG, KOWLOON

徵收差餉及/或地租通知書左上角的帳目編號
The Account Number printed on the top left-hand corner of the Demand for Rates and/or Government Rent
1 2 3 4 5 6 7 8 9 1 2 3 4 5 6 7 8 9 0
為方便確定工程位置或地址，可選擇提供
Optional for easy identification of the location or address of the works

2. 已完成小型工程的詳情
Details of the completed minor works

☐ 另加附加頁 張
Additional __ Page added

小型工程項目 Minor works Item	描述 Description	(如有) 請提供相關命令 / 指示 / 通知 / 屋宇署檔案 編號 Relevant Order / Direction / Notice / BD Reference Number (if available)
3.13	ERECTION OF A SINGLE LEAF METAL GATE AT THE ENTRANCE OF BUILDING ON GROUND FLOOR FACING TUNG MING STREET - NOT INVOLVE THE ALTERATION OF ANY OTHER STRUCTURAL ELEMENTS; - WEIGHT OF THE GATE IS 150 KG; AND - HEIGHT OF THE GATE IS 2.5M.	

各項小型工程項目及其描述(包括性質、位置和數量)必須提供。如空位不敷應用，請另加紙張填寫，附於本通知書內，並在每頁加簽、註明日期及*(如適用)*蓋上公司印鑑。
Every minor works item and its description (including the nature, location and quantity) shall be provided. If space is insufficient, please attach additional sheet(s) which must be signed, dated and affixed with company seal *(if applicable)*.

3. 獲委任訂明註冊承建商的資料
Particulars of the appointed prescribed registered contractor

根據《建築物(小型工程)規例》第 28 條的規定，本人/我們已就本部所述工程委任下述的訂明註冊承建商。
In accordance with the provisions of section 28 of the Building (Minor Works) Regulation, I/we have appointed the prescribed registered contractor as below in respect of the works detailed in this Part.

過人 瑞
訂明註冊承建商中文名稱*Name in Chinese of the prescribed registered contractor*

MWC(W) 6789/2010
註冊證明書編號*
Certificate of Registration Number*

GWO YAN PAK
訂明註冊承建商英文名稱* Name in English of the prescribed registered contractor*

訂明註冊承建商英文名稱*(續)** Name in English of the prescribed registered contractor*(Cont'd)**

* *根據註冊記錄 In accordance with the registration record*

COMPLETED BY THE PERSON WHO ARRANGED FOR THE MINOR WORKS TO BE CARRIED OUT

2012/06 Newly Added

SAMPLE MW05

COMPLETED BY THE PERSON WHO ARRANGED FOR THE MINOR WORKS TO BE CARRIED OUT

4. 安排進行小型工程的人的詳情
Particulars of the person who arranged for the minor works to be carried out

請 仁 造
中文名稱 Name in Chinese

CHING YAN CHO
英文名稱（如有，姓氏先行） Name in English *(Surname first, if any)*

英文名稱（如有，姓氏先行）（續） Name in English *(Surname first, if any) (Cont'd)*

A123456(7)

☑ 香港身份證號碼 HKID Number ☐ 商業登記號碼 Business Registration Number ☐ 護照號碼 Passport Number

☐ 其他（請註明） Others *(Please specify)*

護照簽發國家（如適用） Country of issue of passport *(If applicable)*

通訊地址（如與甲 1 部份相同，則不用填寫）
Correspondence Address *(Not required to complete if same as Part A1)*

FLAT B, 11/F,
ABC BUILDING,
789 KWUN TONG ROAD,
KWUN TONG, KOWLOON

2123456 8
傳真號碼 Fax Number

2123456 7
聯絡電話 Contact Number

cengyanzou@email.com
電郵地址 E-mail Address

請 仁 造
安排進行小型工程的人 簽署（如適用）蓋上公司印鑑
Signature of the person who arranged for the minor works to be carried out & affixed with company seal *(if applicable)*

07 07 2012
日 月 年
day month year

COMPLETED BY THE PRESCRIBED REGISTERED CONTRACTOR

乙部 訂明註冊承建商的委任確認書、完工通知及證明書 *（由已獲委任的訂明註冊承建商填寫）*
Part B Confirmation of appointment, notice and certificate of completion by the prescribed registered contractor
(To be completed by the prescribed registered contractor appointed)

本人/我們 過人 擲
中文名稱* Name in Chinese*

I/We, GWO YAN PAK
英文名稱* Name in English*

英文名稱*（續） Name in English* *(Cont'd)*,

根據《建築物（小型工程）規例》第 36 條及第 37 條的規定，
in accordance with the provisions of sections 36 and 37 of the Building (Minor Works) Regulation,

1. 確認本人/我們已獲委任為**甲部**所述工程的訂明註冊承建商；
confirm that I/we have been appointed as the prescribed registered contractor of the works detailed in **Part A**;

2. 確認甲部所述工程已於 07 07 2012 展開並已於 14 07 2012 完成；
confirm that the works detailed in Part A had been commenced on 日 月 年 *day month year* and completed on 日 月 年 *day month year*;

3. 現呈交顯示有關的處所在緊接**甲部**所述的工程展開前及完工後的實際狀況的照片，及顯示已完成工程的圖則或工程描述；
submit herewith the photographs showing the physical condition of the premises immediately before the commencement and after the completion of the works detailed in **Part A**, and the plans or description of works showing the works as completed;

4. 核證所有**甲部**所述的工程，已按照《建築物條例》及於本部所呈交的圖則或工程描述進行，（如適用）而該些圖則均由，本人/我們製備和簽署（作為已簽署有關圖則的人，本人/我們同意為該等圖則負起《建築物條例》下的所有責任）；
certify that all the works detailed in **Part A**, have been carried out in accordance with the Buildings Ordinance and the plans or description of works submitted in this Part; and the said plans have been prepared and signed by me/us (as the person who has signed the plans, I/we agree to assume all responsibilities under the Buildings Ordinance regarding the plans) (if applicable);

* *根據註冊記錄 In accordance with the registration record*

2012/06 Newly Added

SAMPLE MW05

5. 當本人屬於根據《建築物（小型工程）規例》第 11 條註冊的小型工程承建商【亦即 註冊小型工程承建商（個人）】時，核證**甲部**所述工程已由本人親自進行；及
where I am a contractor registered under section 11 of the Building (Minor Works) Regulation [also known as Registered Minor Works Contractor (Individual)], certify that I have personally carried out the works detailed in **Part A**; and

6. 當**甲部**所述的工程涉及豎設招牌時，確認由他人代為豎設招牌的人士已在**丙部**提供建築事務監督所要求的詳情。
where the works detailed in **Part A** involve the erection of a signboard, confirm that the person for whom the signboard is to be erected has provided the particulars of the person as required by the Building Authority in **Part C**.

（只在早前已獲分配相關呈交編號的文件不能繼續處理時適用）
(Only applicable where the previous submission with Minor Works Submission Number assigned cannot be further processed)

MW
早前相關的小型工程呈交編號
Previously Related Minor Works Submission Number

獲授權簽署人之中文姓名* Name in Chinese of the authorized signatory*

獲授權簽署人之英文姓名* Name in English of the authorized signatory*

3123333333
傳真號碼* Fax Number*

3123333334
聯絡電話 Contact Number

☑ 願意接收短訊通知
Willing to receive Short Messaging Service (SMS) Notification

MWC(W) 6789/2010
註冊證明書編號*
Certificate of Registration Number*

註冊屆滿日期* Date of expiry of registration*: 31 01 2013
日 月 年
day month year

師傅
訂明註冊承建商（獲授權簽署人，如適用）簽署*
Signature* of the prescribed registered contractor (authorized signatory, if applicable)

20 07 2012
日 月 年
day month year

COMPLETED BY THE PRESCRIBED REGISTERED CONTRACTOR

丙部 由他人代為豎設招牌的人士的詳情
Part C *（只在工程涉及豎設招牌時適用，並由他人代為豎設招牌的人士填寫）*
Particulars of the person for whom the signboard is to be erected
(Only applicable to works involving the erection of a signboard and to be completed by the person for whom the signboard is to be erected)

中文名稱 Name in Chinese

英文名稱 *（如有，姓氏先行）* Name in English *(Surname first, if any)*

英文名稱 *（如有，姓氏先行）（續）* Name in English *(Surname first, if any) (Cont'd)*

☐ 香港身份證號碼 HKID Number ☐ 商業登記號碼 Business Registration Number ☐ 護照號碼 Passport Number

☐ 其他 *（請註明）* Others *(Please specify)*

護照簽發國家 *（如適用）* Country of issue of passport *(If applicable)*

通訊地址 ***（如與甲 1 部份相同，則不用填寫）***
Correspondence Address ***(Not required to complete if same as Part A1)***

傳真號碼 Fax Number

聯絡電話 Contact Number

電郵地址 E-mail Address

由他人代為豎設招牌的人士 簽署 *（如適用）* 蓋上公司印鑑
Signature of the person for whom the signboard is to be erected & affixed with company seal *(if applicable)*

20
日 月 年
day month year

COMPLETED BY THE PERSON FOR WHOM THE SIGNBOARD IS TO BE ERECTED

* *根據註冊記錄 In accordance with the registration record*

2012/06 Newly Added

SAMPLE MW05

屋宇署 BUILDINGS DEPARTMENT MW06

檢查及核證訂明建築物或建築工程的通知書
NOTICE OF INSPECTION AND CERTIFICATION OF PRESCRIBED BUILDING OR BUILDING WORKS

本表格及所有證明文件最遲須在完成訂明建築物或建築工程的檢查後 14 天內（如涉及改動或鞏固工程，亦須在該工程完成後 14 天內）呈交

This form and all supporting document(s) must be submitted within 14 days after the completion of the inspection of the prescribed building or building works (if alternation or strengthening works are also involved, within 14 days after the completion of such works)

請以正楷填寫表格，並在適當方格內加上『✓』號。填寫前，請仔細閱讀《注意事項》。
Please read the "Matters to Note", complete the form in BLOCK LETTERS and tick in the appropriate box(es).

只供屋宇署填寫 For Buildings Department's Use only
檢核計劃呈交編號
Validation Scheme Submission Number →

致建築事務監督
To the Building Authority

甲部 獲委任人士的委任通知 *（由安排進行檢查的人填寫）*
Part A Notice of appointment of the appointed persons *(To be completed by the person who arranged for the inspection)*

1. 訂明建築物或建築工程的位置及地址
Location or Address of the prescribed building or building works

EXTERNAL WALL OF FLAT A ON 18/F,
QPR BUILDING,
911 PORTLAND STREET,
MONG KOK

徵收差餉及/或地租通知書左上角的帳目編號
The Account Number printed on the top left-hand corner of the Demand for Rates and/or Government Rent

1	2	3	4	5	6	7	8	9	1	2	3	4	5	6	7	8	9	0

為方便確定工程位置或地址，可選擇提供
Optional for easy identification of the location or address of the works

2. 訂明建築物或建築工程的詳情
Details of the prescribed building or building works

☐ 另加附加頁 張
Additional __ Page added

工程項目 Works Item	描述 Description	（如有）請提供相關命令 / 指示 / 通知 / 屋宇署檔案 編號 Relevant Order / Direction / Notice / BD Reference Number (if available)
2	UNAUTHORIZED METAL SUPPORTING FRAME FOR A/C UNIT (NOT MORE THAN 100 KG IN WEIGHT) PROJECTING NOT MORE THAN 600MM FROM THE EXTERNAL WALL OF LIVING ROOM	

上述工程項目為《建築物（小型工程）規例》附表 3 第 2 部內，並在 2010 年 12 月 31 日前已完成或進行的訂明建築物或建築工程項目。各項工程項目及其描述（包括位置和數量）必須提供。如空位不敷應用，請另加紙張填寫，附於本通知書內，並在每頁加簽、註明日期及*（如適用）*蓋上公司印鑑。
The above works items are the prescribed building or building works items as stipulated in Part 2 of Schedule 3 of the Building (Minor Works) Regulation and have been completed or carried out before 31 December 2010. Every works item and its description (including the location and quantity) shall be provided. If space is insufficient, please attach additional sheet(s) which must be signed, dated and affixed with company seal *(if applicable)*.

3. 獲委任人士的資料
Particulars of the appointed persons

根據《建築物（小型工程）規例》第 62(2)條的規定，本人/我們已委任下述人士就本部所述的訂明建築物或建築工程進行檢查。
In accordance with the provision of section 62(2) of the Building (Minor Works) Regulation, I / we have appointed the person below in respect of the inspection of the prescribed building or building works detailed in this Part.

☐ 認可人士 authorized person ☐ 註冊結構工程師 registered structural engineer ☐ 註冊檢驗人員 registered inspector ☐ 一般註冊承建商 registered general building contractor

☑ 就第 I、II 或 III 級別中的 A 類型小型工程、第 I、II 或 III 級別中的 E 類型小型工程、或第 III 級別中的 3.25、3.27、3.28、3.29、3.34、3.35、3.36、3.37 或 3.38 項小型工程註冊的註冊小型工程承建商
registered minor works contractor registered for Type A minor works under Class I, II or III, Type E minor works under Class I, II or III, or item 3.25, 3.27, 3.28, 3.29, 3.34, 3.35, 3.36, 3.37 or 3.38 of Class III minor works

COMPLETED BY THE PERSON WHO ARRANGED FOR THE INSPECTION

SAMPLE MW06

* *根據註冊記錄 In accordance with the registration record*

2012/06 Newly Added

125K

撥 茶 仁

中文名稱*Name in Chinese*

MWC(W) 6788/2010

註冊證明書編號*
Certificate of Registration Number*

KIM CHA YAN

英文名稱* Name in English*

英文名稱* *(續)* Name in English* *(Cont'd)*

4. **已完成有關上述訂明建築物或建築工程的改動及鞏固工程**
(只在涉及改動或鞏固工程時適用，並只限於第 III 級別中的 3.34、3.35、3.36、3.37 及 3.38 項小型工程)
Completed alteration and strengthening works of the above mentioned prescribed building or building works
(Only applicable where alteration or strengthening works are involved, and restricted to items 3.34, 3.35, 3.36, 3.37 and 3.38 of Class III minor works)

☐ **另加附加頁 張**
Additional __ Page added

小型工程項目 Minor works Item	描述 Description	(如有) 請提供相關命令 / 指示 / 通知 / 屋宇署檔案 編號 Relevant Order / Direction / Notice / BD Reference Number (if available)
3.35	STRENGTHENING OF UNAUTHORIZED METAL SUPPORTING FRAME FOR A/C UNIT (NOT MORE THAN 100 KG IN WEIGHT) PROJECTING NOT MORE THAN 600MM FROM THE EXTERNAL WALL OF LIVING ROOM	

各項小型工程項目及其描述(包括性質、位置和數量)必須提供。如空位不敷應用，請另加紙張填寫，附於本通知書內，並在每頁加簽、註明日期及*(如適用)*蓋上公司印鑑。
Every minor works item and its description (including the nature, location and quantity) shall be provided. If space is insufficient, please attach additional sheet(s) which must be signed, dated and affixed with company seal *(if applicable)*.

獲委任的訂明註冊承建商的資料
Particulars of the prescribed registered contractor appointed

根據《建築物(小型工程)規例》第 28 條的規定，本人/我們已就本部所述工程委任下述的訂明註冊承建商。
In accordance with the provisions of section 28 of the Building (Minor Works) Regulation, I/we have appointed the prescribed registered contractor as below in respect of the works detailed in this Part.

☑ 與**甲 3 部份**獲委任人士相同(不用填寫，詳情請參考**甲 3 部份**)
Identical to the appointed person in **Part A3** (Not required to complete, please make reference to **Part A3** for details)

中文名稱*Name in Chinese*

/

註冊證明書編號*
Certificate of Registration Number*

英文名稱* Name in English*

英文名稱* *(續)* Name in English* *(Cont'd)*

5. **安排進行檢查的人的詳情**
Particulars of the person who arranged for the inspection

如涉及改動或鞏固工程，亦為安排進行改動及鞏固工程的人的詳情
If alteration or strengthening works are involved, also the particulars of the person who arranged for the alteration and strengthening works to be carried out

請 仁 英

中文名稱 Name in Chinese

CHING YAN YIM

英文名稱 *(如有，姓氏先行)* Name in English *(Surname first, if any)*

COMPLETED BY THE PERSON WHO ARRANGED FOR THE INSPECTION

2012/06 Newly Added

* *根據註冊記錄 In accordance with the registration record*

COMPLETED BY THE PERSON WHO ARRANGED FOR THE INSPECTION

英文名稱（如有，姓氏先行）（續） Name in English *(Surname first, if any) (Cont'd)*

A123456(9)

☑ 香港身份證號碼 HKID Number ☐ 商業登記號碼 Business Registration Number ☐ 護照號碼 Passport Number

☐ 其他（請註明）Others *(Please specify)*

護照簽發國家（如適用） Country of issue of passport *(If applicable)*

通訊地址（如與甲 1 部份相同，則不用填寫）
Correspondence Address ***(Not required to complete if same as Part A1)***

FLAT 1, 11/F.,
ABC BUILDING,
789 KWUN TONG ROAD,
KWUN TONG, KOWLOON

21234568
傳真號碼 Fax Number

21234567
聯絡電話 Contact Number

請仁賢

安排進行檢查、改動及鞏固工程的人 簽署（如適用）蓋上公司印鑑
Signature of the person who arranged for the inspection, alteration and strengthening works to be carried out and affixed with company seal *(if applicable)*

日 月 年
day month year
2 0 0 7 2012

COMPLETED BY THE APPOINTED PERSON FOR INSPECTION

乙部 獲委任人的委任確認書及檢查及核證通知書（由獲委任人填寫）
Part B Confirmation of appointment by the appointed person and Notice of Inspection and Certification
(To be completed by the appointed person)

本人/我們 檢查仁
中文名稱* Name in Chinese*

I/We, GIM CHA YAN
英文名稱* Name in English*

英文名稱*（續） Name in English* *(Cont'd)*

根據《建築物條例》第 39C 條 及《建築物 (小型工程) 規例》第 62 條的規定，
in accordance with the provisions of section 39C of the Buildings Ordinance and section 62 of the Building (Minor Works) Regulation,

1. 確認本人/我們已獲委任為檢查**甲 2 部分**所述訂明建築物或建築工程的獲委任人，
   confirm that I / we have been appointed as the appointed person for the inspection of the prescribed building or building works

   而檢查亦已於 17 07 2012 進行;
   detailed in **Part A2**, and the inspection had been carried out on 日 月 年 ;
   day month year

2. 現呈交顯示**甲 2 部分**所述的已檢查的訂明建築物或建築工程的實際狀況的照片及描述；及
   submit herewith photographs and description showing the physical condition of the prescribed building or building works detailed in **Part A2** as inspected; and

3. 核證以下事宜：本人/我們認為甲部所述的訂明建築物或建築工程在結構上是安全的，及符合《建築物條例》(第 123 章)【除《建築物條例》第 14(1)條及《建築物（管理）規例》(第 123 章，附屬法例 A）第 25 條外】的規定。
   certify that the prescribed building or building works detailed in Part A are structurally safe in my/our opinion and comply with the Buildings Ordinance (Cap. 123) [except section 14(1) of the Buildings Ordinance (Cap. 123) and regulation 25 of the Building (Administration) Regulations (Cap.123 sub. leg. A)].

   ☐ 認可人士 authorized person
   ☐ 註冊結構工程師 registered structural engineer
   ☐ 註冊檢驗人員 registered inspector
   ☐ 一般註冊承建商 registered general building contractor
   ☑ 註冊小型工程承建商 registered minor works contractor

* *根據註冊記錄 In accordance with the registration record*

SAMPLE MW06

（只在早前已獲分配相關呈交編號的文件不能繼續處理時適用）
(Only applicable where the previous submission with Validation Scheme Submission Number assigned cannot be further processed)

VS
早前相關的檢核計劃呈交編號
Previously Related Validation Scheme Submission Number

獲授權簽署人之中文姓名* Name in Chinese of the authorized signatory*

獲授權簽署人之英文姓名* Name in English of the authorized signatory*

傳真號碼* Fax Number* 21234566

聯絡電話 Contact Number 21234565

☑ 願意接收短訊通知
Willing to receive Short Messaging Service (SMS) Notification

註冊證明書編號*
Certificate of Registration Number* MWC(WD)6788/2010

註冊屆滿日期* Date of expiry of registration* 31 01 2013
日 月 年
day month year

檢葉仁
獲委任人 簽署*
Signature* of the appointed person

20 07 2012
日 月 年
day month year

COMPLETED BY THE APPOINTED PERSON FOR INSPECTION

丙部 訂明註冊承建商的委任確認書、完工通知及證明書 *（由已獲委任的訂明註冊承建商填寫）*
Part C Confirmation of appointment, notice and certificate of completion by the prescribed registered contractor
(To be completed by the prescribed registered contractor appointed)

本人/我們 檢葉仁
中文名稱* Name in Chinese*

I/We, GIM CHA YAN
英文名稱* Name in English*

英文名稱 *（續）** Name in English *(Cont'd)**

根據《建築物（小型工程）規例》第 36 條及第 37 條的規定，
in accordance with the provisions of sections 36 and 37 of the Building (Minor Works) Regulation,

1. 確認本人/我們已獲委任為**甲 4 部分**述工程的訂明註冊承建商；
   confirm that I/we have been appointed as the prescribed registered contractor of the works detailed in **Part A4**;
2. 確認**甲 4 部分**所述工程已於 10 07 2012 展開並已於 17 07 2012 完成；
   confirm that the works detailed in **Part A4** had been commenced on 10 07 2012 (日 月 年 *day month year*) and completed on 17 07 2012 (日 月 年 *day month year*);
3. 現呈交顯示有關的處所在緊接**甲 4 部分**所述的工程展開前及完工後的實際狀況的照片，及顯示已完成工程的圖則或工程描述；
   submit herewith the photographs showing the physical condition of the premises immediately before the commencement and after the completion of the works detailed in **Part A4**, and the plans or description of works showing the works as completed;
4. 核證所有**甲 4 部分**所述的工程，已按照《建築物條例》及於本部所呈交的圖則或工程描述進行，（如適用）而該些圖則均由，本人/我們製備和簽署（作為已簽署有關圖則的人，本人/我們同意為該等圖則負起《建築物條例》下的所有責任）；及
   certify that all the works detailed in **Part A4**, have been carried out in accordance with the Buildings Ordinance and the plans or description of works submitted in this Part; and the said plans have been prepared and signed by me/us (as the person who has signed the plans, I/we agree to assume all responsibilities under the Buildings Ordinance regarding the plans) (if applicable); and
5. 當本人屬於根據《建築物（小型工程）規例》第 11 條註冊的小型工程承建商【亦即 註冊小型工程承建商（個人）】時，核證**甲 4 部分**所述工程已由本人親自進行。
   where I am a contractor registered under section 11 of the Building (Minor Works) Regulation [also known as Registered Minor Works Contractor (Individual)], certify that I have personally carried out the works detailed in **Part A4**.

獲授權簽署人之中文姓名* Name in Chinese of the authorized signatory*

獲授權簽署人之英文姓名* Name in English of the authorized signatory*

傳真號碼* Fax Number* 21234566

聯絡電話 Contact Number 21234565

☑ 願意接收短訊通知
Willing to receive Short Messaging Service (SMS) Notification

註冊證明書編號*
Certificate of Registration Number* MWC(WD)6788/2010

註冊屆滿日期* Date of expiry of registration* 31 01 2013
日 月 年
day month year

檢葉仁
訂明註冊承建商（獲授權簽署人，如適用）簽署*
Signature* of the prescribed registered contractor (authorized signatory, if applicable)

20 07 2012
日 月 年
day month year

COMPLETED BY THE PRESCRIBED REGISTERED CONTRACTOR

* *根據註冊記錄 In accordance with the registration record*

2012/06 Newly Added

125N

BUILDINGS DEPARTMENT 屋宇署

MW07

簡化規定下註冊結構工程師、註冊岩土工程師或訂明註冊承建商的更改委任通知書

NOTICE OF CHANGE IN APPOINTMENT OF REGISTERED STRUCTURAL ENGINEER, REGISTERED GEOTECHNICAL ENGINEER OR PRESCRIBED REGISTERED CONTRACTOR UNDER THE SIMPLIFIED REQUIREMENTS

本表格須在新獲委任人士獲委任的日期後 7 天內呈交
This form must be submitted within 7 days after the date of the appointment of the new appointed person(s)

請以正楷填寫表格，並在適當方格內加上『✓』號。填寫前，請仔細閱讀《注意事項》。
Please read the "Matters to Note", complete the form in BLOCK LETTERS and tick in the appropriate box(es).

致建築事務監督
To the Building Authority

甲部 新獲委任人士的委任通知 *(由安排進行小型工程的人填寫)*
Part A Notice of appointment of the new appointed persons
(To be completed by the person who arranged for the minor works to be carried out)

MW 1 2 0 7 0 9 9 9 9
小型工程呈交編號
Minor Works Submission Number
必須填寫 MUST COMPLETE

本人/我們 請 仁 造
中文名稱 Name in Chinese

I/We, CHING YAN CHO
英文名稱 *(如有，姓氏先行)* Name in English *(Surname first, if any)*

英文名稱 *(如有，姓氏先行)(續)* Name in English *(Surname first, if any) (Cont'd)*

為上述呈交編號呈交文件內的安排進行小型工程的人。
am/are the person who arranged for the minor works to be carried out under the submission with the above mentioned submission number.

本人/我們現指明下述新獲委任人為根據《建築物(小型工程)規例》第 27 條及/或第 28 條委任以取代原獲委任的人。
I / We specify hereby the new appointed person detailed below as the person appointed under section 27 and/or 28 of the Building (Minor Works) Regulation in the place of the original appointed person.

☐ 註冊結構工程師
registered structural engineer

中文姓名*Name in Chinese*

RSE /
註冊證明書編號*
Certificate of Registration Number*

英文姓名* Name in English*

☐ 註冊岩土工程師
registered geotechnical engineer

中文姓名*Name in Chinese*

RGE /
註冊證明書編號*
Certificate of Registration Number*

英文姓名* Name in English*

☑ 訂明註冊承建商
prescribed registered contractor

大 獅 成 建 雙 建 築 有 限 公 司
中文名稱*
Name in Chinese*

ABC 456789/2009
註冊證明書編號*
Certificate of Registration Number*

TAI PAI SING KIN SOENG CONSTRUCTION COMPANY
英文名稱* Name in English*

LIMITED
英文名稱* *(續)* Name in English* *(Cont'd)*

2666 1234
傳真號碼* Fax Number*

2666 1235
聯絡電話 Contact Number

☑ 願意接收短訊通知
Willing to receive Short Messaging Service (SMS) Notification

生效日期 Effective from 10 09 2012 日 月 年 *day month year*

請 仁 造
安排進行小型工程的人 簽署 *(如適用)* 蓋上公司印鑑
Signature of the person who arranged for the minor works to be carried out and affixed with company seal *(if applicable)*

13 09 2012 日 月 年 *day month year*

COMPLETED BY THE PERSON WHO ARRANGED FOR THE MINOR WORKS TO BE CARRIED OUT

* *根據註冊記錄 In accordance with the registration record*

SAMPLE MW07

乙部　註冊結構工程師的委任確認書 *（由新獲委任的註冊結構工程師填寫）*

Part B Confirmation of appointment by the registered structural engineer

(To be completed by the new registered structural engineer appointed)

COMPLETED BY THE REGISTERED STRUCTURAL ENGINEER

本人 _____
中文姓名*Name in Chinese*

I, _____,
英文姓名*Name in English*

根據《建築物（小型工程）規例》第 48(2)條的規定，確認本人已獲委任為上述呈交編號呈交文件內第 I 級別小型工程的結構元素的註冊結構工程師，以取代原獲委任的註冊結構工程師。

in accordance with the provisions of section 48(2) of the Building (Minor Works) Regulation, confirm that I have been appointed as the registered structural engineer, in the place of the original registered structural engineer appointed for the structural elements of the Class I minor works detailed in the submission with the above mentioned submission number.

傳真號碼* Fax Number*

聯絡電話 Contact Number

☐ 願意接收短訊通知 Willing to receive Short Messaging Service (SMS) Notification

RSE ____/____
註冊證明書編號*
Certificate of Registration Number*

註冊屆滿日期* Date of expiry of registration* ____ 20__
日 月 年
day month year

註冊結構工程師 簽署*
Signature* of the registered structural engineer

____ 20__
日 月 年
day month year

丙部　註冊岩土工程師的委任確認書 *（由新獲委任的註冊岩土工程師填寫）*

Part C Confirmation of appointment by the registered geotechnical engineer

(To be completed by the new registered geotechnical engineer appointed)

COMPLETED BY THE REGISTERED GEOTECHNICAL ENGINEER

本人 _____
中文姓名*Name in Chinese*

I, _____,
英文姓名*Name in English*

根據《建築物（小型工程）規例》第 48(2)條的規定，確認本人已獲委任為上述呈交編號呈交文件內第 I 級別小型工程的岩土元素的註冊岩土工程師，以取代原獲委任的註冊岩土工程師。

in accordance with the provisions of section 48(2) of the Building (Minor Works) Regulation, confirm that I have been appointed as the registered geotechnical engineer, in the place of the original registered geotechnical engineer appointed for the geotechnical elements of the Class I minor works detailed in the submission with the above mentioned submission number.

傳真號碼* Fax Number*

聯絡電話 Contact Number

☐ 願意接收短訊通知 Willing to receive Short Messaging Service (SMS) Notification

RGE ____/____
註冊證明書編號*
Certificate of Registration Number*

註冊屆滿日期* Date of expiry of registration* ____ 20__
日 月 年
day month year

註冊岩土工程師 簽署*
Signature* of the registered geotechnical engineer

____ 20__
日 月 年
day month year

SAMPLE MW07

* *根據註冊記錄 In accordance with the registration record*

2012/06 Newly Added

Optional Page - To be submitted when any parts is completed

COMPLETED BY THE PRESCRIBED REGISTERED CONTRACTOR

丁部 訂明註冊承建商的委任確認書 *(由新獲委任的訂明註冊承建商填寫)*
Part D Confirmation of appointment by the prescribed registered contractor
(To be completed by the new prescribed registered contractor appointed)

我們 大 將 成 建 雙 建 築 有 限 公 司
中文名稱* Name in Chinese*

We, TAI PAI SING GIN SOENG CONSTRUCTION COMPANY
英文名稱* Name in English*

LIMITED,
英文名稱* *(續)* Name in English* *(Cont'd)*

根據《建築物(小型工程)規例》第 48(2)條及第 48(4)條的規定，確認本人已獲委任為上述呈交編號呈交文件內的訂明註冊承建商，以取代原獲委任的訂明註冊承建商。

in accordance with the provisions of section 48(2) and section 48(4) of the Building (Minor Works) Regulation, confirm that I have been appointed as the prescribed registered contractor, in the place of the original prescribed registered contractor appointed for the minor works detailed in the submission with the above mentioned submission number.

授權仁
獲授權簽署人之中文姓名* Name in Chinese of the authorized signatory*

AUTHORIZED SIGNATORY
獲授權簽署人之英文姓名* Name in English of the authorized signatory*

2666 1234
傳真號碼* Fax Number*

2666 1235
聯絡電話 Contact Number

☑ 願意接收短訊通知 Willing to receive Short Messaging Service (SMS) Notification

GBC 456789 / 2009
註冊證明書編號*
Certificate of Registration Number*

註冊屆滿日期* Date of expiry of registration* 31 01 2013 (日 月 年 *day month year*)

A. Signatory
訂明註冊承建商(獲授權簽署人)簽署*
Signature* of the prescribed registered contractor (authorized signatory)

13 09 2012 (日 月 年 *day month year*)

COMPLETED BY THE AUTHORIZED PERSON OR REGISTERED INSPECTOR

戊部 呈交經修訂的監工計劃書
Part E *(只在技術備忘錄要求有監工計劃書時適用，並由已獲委任的認可人士或註冊檢驗人員填寫)*
Submission of the revised supervision plan
(Only applicable when supervision plan is required by the technical memorandum, and to be completed by the authorized person or registered inspector appointed)

本人
中文姓名*Name in Chinese*

I,
英文姓名*Name in English*

為上述呈交編號呈交文件內的已獲委任的認可人士或註冊檢驗人員，根據《建築物(小型工程)規例》第 48(2)條的規定，現呈交經修訂的監工計劃書。

am the authorized person or registered inspector appointed in the submission with the above mentioned submission number, in accordance with the provisions of section 48(2) of the Building (Minor Works) Regulation, submit herewith a revised supervision plan.

傳真號碼* Fax Number*

聯絡電話 Contact Number

☐ 願意接收短訊通知 Willing to receive Short Messaging Service (SMS) Notification

/
註冊證明書編號*
Certificate of Registration Number*

註冊屆滿日期* Date of expiry of registration* 20 (日 月 年 *day month year*)

認可人士或註冊檢驗人員 簽署*
Signature* of the authorized person or registered inspector

20 (日 月 年 *day month year*)

SAMPLE MW07

2012/06 Newly Added

* *根據註冊記錄 In accordance with the registration record*

Optional Page - To be submitted when any parts is completed

BUILDINGS DEPARTMENT 屋宇署

MW08

簡化規定下認可人士或註冊檢驗人員的更改委任通知書
NOTICE OF CHANGE IN APPOINTMENT OF AUTHORIZED PERSON OR REGISTERED INSPECTOR UNDER THE SIMPLIFIED REQUIREMENTS

本表格須在有關的新獲委任人獲委任的日期後 7 天內呈交
This form must be submitted within 7 days after the date of appointment of the new appointed person concerned

請以正楷填寫表格，並在適當方格內加上『✓』號。填寫前，請仔細閱讀《注意事項》。
Please read the "Matters to Note", complete the form in BLOCK LETTERS and tick in the appropriate box(es).

致建築事務監督
To the Building Authority

甲部 新獲委任認可人士或註冊檢驗人員的委任 *(由安排進行小型工程的人填寫)*
Part A The appointment of the new appointed authorized person or registered inspector
(To be completed by the person who arranged for the minor works to be carried out)

MW 1 2 0 7 0 8 8 8 8
小型工程呈交編號
Minor Works Submission Number
必須填寫 MUST COMPLETE

本人/我們 請 仁 造
中文名稱 Name in Chinese

I/We, CHING YAN CHO
英文名稱 *(如有，姓氏先行)* Name in English *(Surname first, if any)*

英文名稱 *(如有，姓氏先行)(續)* Name in English *(Surname first, if any) (Cont'd)*

為上述呈交編號呈交文件內的安排進行小型工程的人。本人/我們現指明下述新獲委任人為根據《建築物(小型工程)規例》第 27 條委任以取代原獲委任人的人。
am/are the person who arranged for the minor works to be carried out in the submission with the above mentioned submission number. I/we specify hereby the new appointed person detailed below as the person appointed under section 27 in the place of the original appointed person.

檢 驗 仁
中文姓名*
Name in Chinese*

RE(S)7777/09
註冊證明書編號*
Certificate of Registration Number*

KIM YIM YAN
英文姓名* Name in English*

生效日期 Effective from 2 0 0 7 20 1 2
日 月 年
day month year

請 仁 造
安排進行小型工程的人 簽署 *(如適用)* 蓋上公司印鑑
Signature of the person who arranged for the minor works to be carried out and affixed with company seal *(if applicable)*

1 8 0 7 20 1 2
日 月 年
day month year

COMPLETED BY THE PERSON WHO ARRANGED FOR THE MINOR WORKS TO BE CARRIED OUT

乙部 認可人士或註冊檢驗人員的委任確認書 *(由新獲委任的認可人士或註冊檢驗人員填寫)*
Part B Confirmation of appointment by the authorized person or registered inspector
(To be completed by the new authorized person or registered inspector appointed)

本人 檢驗仁
中文姓名*Name in Chinese*

I, KIM YIM YAN,
英文姓名*Name in English*

根據《建築物(小型工程)規例》第 48(3)條的規定，
in accordance with the provisions of section 48(3) of the Building (Minor Works) Regulation,

1. 確認本人已獲委任為上述呈交編號呈交文件內的第 I 級別小型工程的認可人士或註冊檢驗人員(只在工程屬訂明修葺或任何相關的拆卸工程時適用)，以取代原獲委任人的人；及
   confirm that I have been appointed as the authorized person or registered inspector (only applicable where the works are a prescribed repair or any associated demolition works) in the place of the original appointed person for the Class I minor works detailed in the submission with the above mentioned submission number; and
2. 當技術備忘錄要求有監工計劃書時，根據《建築物(小型工程)規例》第 48(3)(b)條的規定，現呈交經修訂的監工計劃書。
   where supervision plan is required by the technical memorandum, in accordance with the provisions of section 48(3)(b) of the Building (Minor Works) Regulation, submit herewith a revised supervision plan.

2 1 2 3 4 5 6 1
傳真號碼* Fax Number*

2 1 2 3 4 5 6 0
聯絡電話 Contact Number

☑ 願意接收短訊通知
Willing to receive Short Messaging Service (SMS) Notification

RE(S)7777/09
註冊證明書編號*
Certificate of Registration Number*

註冊屆滿日期* Date of expiry of registration* 0 3 0 2 20 1 7
日 月 年
day month year

檢驗仁
認可人士或註冊檢驗人員 簽署*
Signature* of the authorized person or registered inspector

1 8 0 7 20 1 2
日 月 年
day month year

COMPLETED BY THE AUTHORIZED PERSON OR REGISTERED INSPECTOR

* *根據註冊記錄 In accordance with the registration record*

Form MW08 (06/2012) 1/1

2012/06 Newly Added

SAMPLE MW08

屋宇署 BUILDINGS DEPARTMENT

MW09

簡化規定下已獲委任的訂明建築專業人士提名另一位訂明建築專業人士在暫時不能行事期間代為行事的通知書

NOTICE OF NOMINATION BY PRESCRIBED BUILDING PROFESSIONAL APPOINTED OF ANOTHER PRESCRIBED BUILDING PROFESSIONAL TO ACT IN HIS PLACE FOR THE PERIOD OF TEMPORARY INABILITY TO ACT UNDER THE SIMPLIFIED REQUIREMENTS

本表格須在有關提名的日期後 7 天內呈交

This form must be submitted within 7 days after the date of the nomination

請以正楷填寫表格，並在適當方格內加上『✓』號。填寫前，請仔細閱讀《注意事項》。

Please read the "Matters to Note", complete the form in BLOCK LETTERS and tick in the appropriate box(es).

致建築事務監督

To the Building Authority

COMPLETED BY THE NOMINATOR

甲部 提名人的提名通知及確認書

Part A 【由提名人（即提名另一人代為行事的已獲委任的訂明建築專業人士）填寫】

Notice of nomination and confirmation by the nominator

[To be completed by the nominator (the prescribed building professional appointed who nominates another person to act in his place)]

MW 1 2 0 7 0 7 7 7 7

小型工程呈交編號

Minor Works Submission Number

必須填寫 MUST COMPLETE

*注意：如多於一個小型工程呈交編號，請填寫於**丙部**內。*

*Notes : If there is more than 1 minor works submission number, please fill in **Part C**.*

本人 提名人 為上述及丙部內所有呈交編號呈交文件內的已獲委任的

中文姓名*Name in Chinese*

I, NOMINATOR, am the

英文姓名*Name in English*

☑ 認可人士 authorized person / ☐ 註冊檢驗人員 registered inspector · ☐ 註冊結構工程師 registered structural engineer · ☐ 註冊岩土工程師 registered geotechnical engineer。

本人現按照《建築物（小型工程）規例》第 49 條的規定作出通知，確認已根據《建築物條例》第 4A(5)條的規定，提名下述的訂明建築專業人士在本人因

appointed in the submission with the above mentioned submission number and all submission numbers listed in Part C. In accordance with the provisions of section 49 of the Building (Minor Works) Regulation, I hereby notify and confirm that I have nominated under section 4A(5) of the Buildings Ordinance the prescribed building professional as below to act in my place for the period of my

☐ 患病 illness · 即由 as from 16 07 2012 (日 day 月 month 年 year) 至 to 20 07 2012 (日 day 月 month 年 year) 或 or ☐ 另行通知為止 until further notice ·

☑ 暫時離開香港期間 temporary absence from Hong Kong

就上述及丙部內所有呈交編號呈交文件內的小型工程代本人行事。

in respect of the minor works detailed in the submission with the above mentioned submission number and all submission numbers listed in Part C.

註冊證明書編號* Certificate of Registration Number*: AP(A)8888/88

傳真號碼* Fax Number*: 21234561

註冊屆滿日期* Date of expiry of registration*: 03 02 2017 (日 day 月 month 年 year)

提名人 簽署* Signature* of the nominator: 提名人

13 07 2012 (日 day 月 month 年 year)

COMPLETED BY THE NOMINEE

乙部 被提名人的確認書（由被提名的訂明建築專業人士填寫）

Part B Confirmation of nomination by the nominee *(To be completed by the prescribed building professional nominated)*

本人 認可仁

中文姓名*Name in Chinese*

I, YING HO YAN,

英文姓名*Name in English*

現根據《建築物（小型工程）規例》第 49 條的規定，確認接受甲部所述的提名，就上述及丙部內所有呈交編號呈交文件內的小型工程在甲部所述期間代甲部所述的提名人行事。

in accordance with the provisions of section 49 of the Building (Minor Works) Regulation, confirm my acceptance of the nomination detailed in Part A and that I will act in the place of the nominator for the period detailed in Part A in respect of the minor works detailed in the submission with the above mentioned submission number and all submission numbers listed in Part C.

註冊證明書編號* Certificate of Registration Number*: AP(A)9999/99

傳真號碼* Fax Number*: 21234566

註冊屆滿日期* Date of expiry of registration*: 04 07 2013 (日 day 月 month 年 year)

被提名人 簽署* Signature* of the nominee: 認可仁

13 07 2012 (日 day 月 month 年 year)

* *根據註冊記錄 In accordance with the registration record*

SAMPLE MW09

屋宇署 BUILDINGS DEPARTMENT

MW10

簡化規定下訂明註冊承建商不再獲委任的通知書
NOTICE OF PRESCRIBED REGISTERED CONTRACTOR ON CEASING TO BE APPOINTED UNDER THE SIMPLIFIED REQUIREMENTS

本表格及所有證明文件最遲須在不再獲委任的日期後 7 天內呈交（如涉及第 I 級別小型工程，亦須在認可人士接獲交付他的通知當日後的 7 天內呈交）

This form and all supporting document(s) must be submitted within 7 days after the date of the cessation (if Class I minor works are involved, within 7 days after the date of receipt of the notice by the authorized person)

請以正楷填寫表格，並在適當方格內加上『✓』號。填寫前，請仔細閱讀《注意事項》。

Please read the "Matters to Note", complete the form in BLOCK LETTERS and tick in the appropriate box(es).

致建築事務監督

To the Building Authority

甲部　不再獲委任的訂明註冊承建商的通知書

Part A *（由已不再獲委任的訂明註冊承建商填寫）*

Notice of the prescribed registered contractor on ceasing to be appointed

(To be completed by the prescribed registered contractor ceased to be appointed)

MW 1 2 0 7 1 1 1 4 7

小型工程呈交編號

Minor Works Submission Number

必須填寫 MUST COMPLETE

我們 大 將 成 建 雙 建 築 有 限 公 司

中文名稱* Name in Chinese*

We, TAI PAI SEN GAIN SOENG CONSTRUCTION COMPANY

英文名稱* Name in English*

LIMITED,

英文名稱*（續） Name in English*(Cont'd)

為上述呈交編號呈交文件內的已獲委任的訂明註冊承建商，根據《建築物（小型工程）規例》第 51 條的規定，呈交此通知述明我們自

are the prescribed registered contractor appointed under the submission with the above mentioned submission number, in accordance with the provisions of section 51 of the Building (Minor Works) Regulation, submit herewith this notice of the fact that, with effect from

1 0 0 9 20 1 2 起，不再獲委任為上述小型工程編號的訂明註冊承建商；並核證所有在上述呈交編號呈交文件內的下述小型工

日 月 年 (day month year), we have ceased to be appointed as the prescribed registered contractor of the minor works detailed in the

程，已按照《建築物條例》及已呈交的訂明圖則及詳圖進行；

submission with the above mentioned submission number; and certify that all the following minor works under the above mentioned submission number have been carried out in accordance with the Buildings Ordinance and the submitted prescribed plans and details;

☐ 另加附加頁　張

Additional __Page added

小型工程項目 Minor works Item	描述 Description	（如有）請提供相關命令 / 指示 / 通知 / 屋宇署檔案 編號 Relevant Order / Direction / Notice / BD Reference Number (if available)
2.30	ERECTION OF ABOVEGROUND DRAIN AT XYZ MANSION	

各項小型工程項目及其描述（包括性質、位置和數量）必須提供。如空位不敷應用，請另加紙張填寫，附於本通知書內，並在每頁加簽及註明日期。

Every minor works item and its description (including the nature, location and quantity) shall be provided. If space is insufficient, please attach additional sheet(s) which must be signed and dated.

COMPLETED BY THE PRESCRIBED REGISTERED CONTRACTOR

SAMPLE MW10

* *根據註冊記錄 In accordance with the registration record*

COMPLETED BY THE PRESCRIBED REGISTERED CONTRACTOR

1. 現呈交顯示所有已完成的小型工程的圖則及照片；
submit herewith plans and photographs showing all the minor works as completed;

2. 當已完成的工程不屬拆卸工程時，核證我們認為所有已完成的工程在結構上是安全的；
where the completed works are other than demolition works, certify that, in our opinion, all the completed works are structurally safe;

3. 當已完成的工程屬拆卸工程時，核證我們認為所有受上述工程影響的任何土地或街道有足夠安全度，且在有關的處所尚餘的任何構築物在結構上是安全的；及
where the completed works are demolition works, certify that, in our opinion, any land or street affected by the said works has an adequate margin of safety and any structure remaining on the premises is structurally safe; and

4. 當已完成的工程涉及**第 I 級別**小型工程時，在不再獲委任當日後的 7 天內，現將本通知書交付予根據《建築物（小型工程）規例》第 27 條委任 或 根據《建築物條例》第 4A(5)條提名的認可人士或註冊檢驗人員。
where the completed works involve **Class I** minor works, deliver herewith to the authorized person or registered inspector appointed under section 27 of the Building (Minor Works) Regulation or nominated under section 4A(5) of the Buildings Ordinance this notice within 7 days after the date of cessation.

授權仁
獲授權簽署人之中文姓名* Name in Chinese of the authorized signatory*

AUTHORIZED SIGNATORY
獲授權簽署人之英文姓名* Name in English of the authorized signatory*

ABC 456789/2009
註冊證明書編號*
Certificate of Registration Number*

2666 1234
傳真號碼* Fax Number*

2666 1235
聯絡電話 Contact Number

☑ 願意接收短訊通知
Willing to receive Short Messaging Service (SMS) Notification

註冊屆滿日期* Date of expiry of registration* 31 01 2013
日 月 年
day month year

A. Signatory
訂明註冊承建商（獲授權簽署人）簽署*
Signature* of the prescribed registered contractor (authorized signatory)

10 08 2012
日 月 年
day month year

COMPLETED BY THE AUTHORIZED PERSON OR REGISTERED INSPECTOR

乙部 認可人士或註冊檢驗人員的呈交 *（由已獲委任的認可人士或註冊檢驗人員填寫）*

Part B Submission by the authorized person or registered inspector *(To be completed by the authorized person or registered inspector appointed)*

本人 _____
中文姓名*Name in Chinese*

I, _____,
英文姓名*Name in English*

為根據《建築物（小型工程）規例》第 27 條就上述小型工程編號呈交文件內的第 I 級別小型工程委任或根據《建築物條例》第 4A(5)條就該工程獲提名的認可人士或註冊檢驗人員。按照《建築物（小型工程）規例》第 52 條的規定，本人現呈交由訂明註冊承建商根據《建築物（小型工程）規例》第 51(1)(a) 條的規定於

am the authorized person or registered inspector appointed under section 27 of the Building (Minor Works) Regulation or nominated under section 4A(5) of the Buildings Ordinance for the Class I minor works detailed in the submission with the above mentioned minor works submission number. In accordance with the provisions of section 52 of the Building (Minor Works) Regulation, I submit herewith the notice detailed in Part A which was delivered to me on

___ ___ 20__ 交付予本人於甲部所述的通知書。
日 月 年 by the prescribed registered contractor as required by section 51(1)(a) of the Building (Minor Works) Regulation.
day month year

傳真號碼* Fax Number*

聯絡電話 Contact Number

☐ 願意接收短訊通知
Willing to receive Short Messaging Service (SMS) Notification

/
註冊證明書編號*
Certificate of Registration Number*

註冊屆滿日期* Date of expiry of registration* 20__
日 月 年
day month year

認可人士或註冊檢驗人員 簽署*
Signature* of the authorized person or registered inspector

20__
日 月 年
day month year

SAMPLE MW10

* *根據註冊記錄 In accordance with the registration record*

屋宇署 BUILDINGS DEPARTMENT

MW11

簡化規定下的新增小型工程展開通知書（有委任訂明建築專業人士）
NOTICE OF COMMENCEMENT OF ADDITIONAL MINOR WORKS UNDER THE SIMPLIFIED REQUIREMENTS (WITH PRESCRIBED BUILDING PROFESSIONALS APPOINTED)

本表格及所有證明文件最遲須在展開新增小型工程項目前 7 天呈交
This form and all supporting document(s) must be submitted not less than 7 days before the commencement of the additional minor works item(s)

請以正楷填寫表格，並在適當方格內加上『✓』號。填寫前，請仔細閱讀《注意事項》。
Please read the "Matters to Note", complete the form in BLOCK LETTERS and tick in the appropriate box(es).

致建築事務監督
To the Building Authority

甲部 獲委任人士的委任通知 *（由安排進行小型工程的人填寫）*
Part A Notice of appointment of the appointed persons
(To be completed by the person who arranged for the minor works to be carried out)

MW 1 2 0 7 0 9 9 9 9
小型工程呈交編號
Minor Works Submission Number
必須填寫 MUST COMPLETE

本人/我們 請 仁 造
中文名稱 Name in Chinese

I/We, CHING YAN CHO
英文名稱 *（如有，姓氏先行）* Name in English *(Surname first, if any)*

英文名稱 *（如有，姓氏先行）（續）* Name in English *(Surname first, if any) (Cont'd)*

為上述呈交編號呈交文件內安排進行小型工程的人，根據《建築物（小型工程）規例》第 27 條及第 28 條的規定，本人/我們已就本部所述的工程，分別委任上述呈交編號呈交文件內已獲委任的訂明建築專業人士及訂明註冊承建商，作為訂明建築專業人士及訂明註冊承建商。

am/are the person who arranged for the minor works to be carried out under the submission with the above mentioned submission number, in accordance with the provisions of sections 27 and 28 of the Building (Minor Works) Regulation, I/we have respectively appointed the prescribed building professionals and prescribed registered contractor appointed under the submission with the above mentioned submission number, as prescribed building professionals and prescribed registered contractor in respect of the works detailed in this Part.

擬在上述呈交編號呈交文件內相同位置或地址進行新增的小型工程的詳情
Details of the proposed additional minor works to be carried out at the same location or address under the submission with the above mentioned submission number

☐ 另加附加頁 張
Additional __ Page added

小型工程項目 Minor works Item	描述 Description	（如有） 請提供相關命令 / 指示 / 通知 / 屋宇署檔案 編號 Relevant Order / Direction / Notice / BD Reference Number (if available)
1.28	ERECTION OF SUPPORTING FRAME FOR A/C UNIT	
	PROJECTING 700MM FROM EXTERNAL WALL ON 2/F.	
	WEIGHT OF THE SAID A/C UNIT TO BE 120KG.	
2.18	ERECTION OF PROJECTING SIGNBOARD WITH DISPLAY	
	AREA OF 10 m^2, NOT CONSIST OF STONE, ON EXTERNAL WALL	

各項小型工程項目及其描述（包括性質、位置和數量）必須提供。如空位不敷應用，請另加紙張填寫，附於本通知書內，並在每頁加簽、註明日期及 *（如適用）* 蓋上公司印鑑。

Every minor works item and its description (including the nature, location and quantity) shall be provided. If space is insufficient, please attach additional sheet(s) which must be signed, dated and affixed with company seal *(if applicable)*.

請 仁 造

安排進行小型工程的人 簽署 *（如適用）* 蓋上公司印鑑
Signature of the person who arranged for the minor works to be carried out & affixed with company seal *(if applicable)*

05 07 2012
日 月 年
day month year

COMPLETED BY THE PERSON WHO ARRANGED FOR THE MINOR WORKS TO BE CARRIED OUT

2012/06 Newly Added

SAMPLE MW11

COMPLETED BY THE AUTHORIZED PERSON OR REGISTERED INSPECTOR

乙部 認可人士或註冊檢驗人員的委任確認書 *(由已獲委任的認可人士或註冊檢驗人員填寫)*
Part B Confirmation of appointment by the authorized person or registered inspector
(To be completed by the authorized person or registered inspector appointed)

本人 認可仁
中文姓名*Name in Chinese*

I, YUNG HO YAN,
英文姓名*Name in English*

為上述呈交編號呈交文件內的已獲委任的認可人士或註冊檢驗人員，根據《建築物(小型工程)規例》第 30 條及第 37 條的規定，
am the authorized person or registered inspector appointed under the submission with the above mentioned submission number, in accordance with the provisions of sections 30 and 37 of the Building (Minor Works) Regulation,

1. 確認本人已獲委任為**甲部**所述的**第 I 級別**小型工程的認可人士或註冊檢驗人員(如該工程屬訂明修葺或任何相關的拆卸工程);
confirm that I have been appointed as the authorized person or registered inspector (if the works are a prescribed repair or any associated demolition works) for the **Class I** minor works detailed in **Part A**;
2. 確認**甲部**所述的**第 I 級別**小型工程將於 12 07 2012 展開;
confirm that the **Class I** minor works detailed in **Part A** are to be commenced on 日 *day* 月 *month* 年 *year*;
3. 現呈交顯示**甲部**所述的**第 I 級別**小型工程的訂明圖則及詳圖，和處所實際狀況的照片;
submit herewith the prescribed plans and details of the **Class I** minor works detailed in **Part A**, and the photographs showing the physical condition of the premises where the **Class I** minor works detailed in **Part A** are to be carried out;
4. 確認在本部呈交的訂明圖則及詳圖，均由本人製備和簽署(作為已簽署有關圖則的人，本人同意為該等圖則負起《建築物條例》下的所有責任);
confirm that the prescribed plans and details submitted under this Part, have been prepared and signed by me (as the person who has signed the plans, I agree to assume all responsibilities under the Buildings Ordinance regarding the plans);
5. 當**甲部**所述的**第 I 級別**小型工程包括對任何建築物進行修葺、改動或加建時，已核證以下事宜：在檢查該建築物後，本人認為該建築物有能力承受因**第 I 級別**小型工程而可能有所增加或在任何方面有所改動的荷載及應力;
where the **Class I** minor works detailed in **Part A** comprise repairs, alterations or additions to any building, certified that, after inspecting the building, I am of the opinion that the building is capable of bearing the loads and stresses which may be increased or altered in any way as a result of the **Class I** minor works;
6. 當**甲部**所述的**第 I 級別**小型工程涉及豎設招牌時，確認由他人代為豎設招牌的人士已在**己部**提供建築事務監督所要求的詳情;及
where the **Class I** minor works detailed in **Part A** involve the erection of a signboard, confirm that the person for whom the signboard is to be erected has provided the particulars of the person as required by the Building Authority in **Part F**; and
7. 當技術備忘錄要求有監工計劃書時，現呈交監工計劃書。
where supervision plan is required by the technical memorandum, submit herewith a supervision plan.

傳真號碼* Fax Number* 2123456 6
聯絡電話 Contact Number 2123456 5
☑ 願意接收短訊通知 Willing to receive Short Messaging Service (SMS) Notification

註冊證明書編號* Certificate of Registration Number* AP(A)9999/99

註冊屆滿日期* Date of expiry of registration* 04 07 2013 日 *day* 月 *month* 年 *year*

認可仁
認可人士或註冊檢驗人員 簽署* Signature* of the authorized person or registered inspector

05 07 2012 日 *day* 月 *month* 年 *year*

SAMPLE MW11

* *根據註冊記錄 In accordance with the registration record*

丙部　註冊結構工程師的委任確認書 *（由已獲委任的註冊結構工程師填寫）*
Part C Confirmation of appointment by the registered structural engineer
(To be completed by the registered structural engineer appointed)

本人 恭晴司
中文姓名*Name in Chinese*

I, GUNG CHI SZE,
英文姓名*Name in English*

為上述呈交編號呈交文件內的已獲委任的註冊結構工程師，根據《建築物（小型工程）規例》第 30 條及第 37 條的規定，
am the registered structural engineer appointed under the submission with the above mentioned submission number, in accordance with the provisions of sections 30 and 37 of the Building (Minor Works) Regulation,

1. 確認本人已獲委任為**甲部**所述的**第 I 級別**小型工程的結構元素的註冊結構工程師；
confirm that I have been appointed as the registered structural engineer for the structural elements of the **Class I** minor works detailed in **Part A**;
2. 確認在**乙部**呈交的訂明圖則及詳圖內的基礎圖則、結構詳圖或計算資料，均由本人製備和簽署（作為已簽署有關圖則的人，本人同意為該等圖則負起《建築物條例》下的所有責任）；及
confirm that the foundation plans, structural details or calculations submitted under the prescribed plans and details in **Part B** have been prepared and signed by me (as the person who has signed the plans, I agree to assume all responsibilities under the Buildings Ordinance regarding the plans); and
3. 當**甲部**所述的**第 I 級別**小型工程包括對任何建築物進行修葺、改動或加建時，已核證以下事宜：在檢查該建築物後，本人認為該建築物有能力承受因第 I 級別小型工程而可能有所增加或在任何方面有所改動的荷載及應力；
where the **Class I** minor works detailed in **Part A** comprise repairs, alterations or additions to any building, certified that, after inspecting the building, I am of the opinion that the building is capable of bearing the loads and stresses which may be increased or altered in any way as a result of the Class I minor works;

2123456 4
聯絡電話 Contact Number
☑ 願意接收短訊通知
Willing to receive Short Messaging Service (SMS) Notification

RSE 8888/88
註冊證明書編號*
Certificate of Registration Number*

註冊屆滿日期* 04 07 2013
Date of expiry of registration* 日 月 年 *day month year*

恭晴司
註冊結構工程師 簽署*
Signature* of the registered structural engineer

05 07 2012
日 月 年 *day month year*

COMPLETED BY THE REGISTERED STRUCTURAL ENGINEER

丁部　註冊岩土工程師的委任確認書 *（由已獲委任的註冊岩土工程師填寫）*
Part D Confirmation of appointment by the registered geotechnical engineer
(To be completed by the registered geotechnical engineer appointed)

本人
中文姓名*Name in Chinese*

I,
英文姓名*Name in English*

為上述呈交編號呈交文件內的已獲委任的註冊岩土工程師，根據《建築物（小型工程）規例》第 30 條及第 37 條的規定，
am the registered geotechnical engineer appointed under the submission with the above mentioned submission number, in accordance with the provisions of sections 30 and 37 of the Building (Minor Works) Regulation,

1. 確認本人已獲委任為**甲部**所述的**第 I 級別**小型工程的岩土元素的註冊岩土工程師；及
confirm that I have been appointed as the registered geotechnical engineer for the geotechnical elements of the **Class I** minor works detailed in **Part A**; and
2. 確認在**乙部**呈交的訂明圖則及詳圖內的岩土圖則、岩土評估、岩土詳圖或計算資料及岩土報告，均由本人製備和簽署（作為已簽署有關圖則的人，本人同意為該等圖則負起《建築物條例》下的所有責任）。
confirm that the geotechnical plans, geotechnical assessment, geotechnical details or calculations and geotechnical reports submitted under the prescribed plans and details in **Part B** have been prepared and signed by me (as the person who has signed the plans, I agree to assume all responsibilities under the Buildings Ordinance regarding the plans).

聯絡電話 Contact Number
☐ 願意接收短訊通知
Willing to receive Short Messaging Service (SMS) Notification

RGE /
註冊證明書編號*
Certificate of Registration Number*

註冊屆滿日期* 20
Date of expiry of registration* 日 月 年 *day month year*

註冊岩土工程師 簽署*
Signature* of the registered geotechnical engineer

20
日 月 年 *day month year*

COMPLETED BY THE REGISTERED GEOTECHNICAL ENGINEER

2012/06 Newly Added

* *根據註冊記錄 In accordance with the registration record*

Optional Page - To be submitted when any parts is completed

125X

SAMPLE MW11

COMPLETED BY THE PRESCRIBED REGISTERED CONTRACTOR

戊部 訂明註冊承建商的委任確認書 *(由已獲委任的訂明註冊承建商填寫)*
Part E Confirmation of appointment by the prescribed registered contractor
(To be completed by the prescribed registered contractor appointed)

我們 公私牌戌建雙工程有限公司
中文名稱* Name in Chinese*

We, GUNG SI PAI SING GIN SOENG ENGINEERING COMPANY
英文名稱* Name in English*

LIMITED,
英文名稱* *(續)* Name in English* *(Cont'd)*

為上述呈交編號呈交文件內的已獲委任的訂明註冊承建商，根據《建築物(小型工程)規例》第 30 條、第 33 條及第 37 條 *(當甲部所述工程涉及第 II 級別小型工程時)* 的規定，
are the prescribed registered contractor appointed under the submission with the above mentioned submission number, in accordance with the provisions of sections 30, sections 33 and 37 *(where Class II minor works are involved in works detailed in Part A)* of the Building (Minor Works) Regulation,

1. 確認我們已獲委任為**甲部**所述工程的訂明註冊承建商；
confirm that we have been appointed as the prescribed registered contractor of the works detailed in **Part A**;

當甲部所述工程涉及第 II 級別小型工程時，
where Class II minor works are involved in the works detailed in Part A,

2. 確認**甲部**所述的**第 II 級別**小型工程將於
confirm that the **Class II** minor works detailed in **Part A** are to be commenced on

☑ **乙部**第 2 段所述同日展開；或
the same date as stated in paragraph 2 of **Part B**; or

☐ ____ 20__ 展開 *(只在乙部第 2 段並未指明日期時適用)*。
日 月 年 *(Only applicable where no date is specified in paragraph 2 of Part B).*
day month year

3. 現呈交顯示**甲部**所述的**第 II 級別**小型工程的訂明圖則及詳圖，和處所實際狀況的照片；
submit herewith the prescribed plans and details of the **Class II** minor works detailed in **Part A**, and the photographs showing the physical condition of the premises where the **Class II** minor works detailed in **Part A** are to be carried out;

4. 確認在本部呈交的訂明圖則及詳圖，均由我們製備和簽署 (作為已簽署有關圖則的人，我們同意為該等圖則負起《建築物條例》下的所有責任)；
confirm that the prescribed plans and details submitted under this Part, have been prepared and signed by us (as the person who has signed the plans, we agree to assume all responsibilities under the Buildings Ordinance regarding the plans);

5. 當**甲部**所述的**第 II 級別**小型工程包括對任何建築物進行修葺、改動或加建時，已核證以下事宜：在檢查該建築物後，我們認為該建築物有能力承受因**第 II 級別**小型工程而可能有所增加或在任何方面有所改動的荷載及應力；及
where the **Class II** minor works detailed in **Part A** comprise repairs, alterations or additions to any building, certified that, after inspecting the building, we are of the opinion that the building is capable of bearing the loads and stresses which may be increased or altered in any way as a result of the **Class II** minor works; and

6. 當**甲部**所述的**第 II 級別**小型工程涉及豎設招牌時，確認由他人代為豎設招牌的人士已在**己部**提供建築事務監督所要求的詳情。
where the **Class II** minor works detailed in **Part A** involve the erection of a signboard, confirm that the person for whom the signboard is to be erected has provided the particulars of the person as required by the Building Authority in **Part F**.

簽桂仁
獲授權簽署人之中文姓名* Name in Chinese of the authorized signatory*

CIM CYU YAN
獲授權簽署人之英文姓名* Name in English of the authorized signatory*

MWC 456790/2011
註冊證明書編號*
Certificate of Registration Number*

2123456 3
傳真號碼* Fax Number*

2123456 2
聯絡電話 Contact Number

☑ 願意接收短訊通知
Willing to receive Short Messaging Service (SMS) Notification

註冊屆滿日期* 04 07 2014
Date of expiry of registration*
日 月 年
day month year

簽名
訂明註冊承建商(獲授權簽署人)簽署*
Signature* of the prescribed registered contractor (authorized signatory)

05 07 2012
日 月 年
day month year

SAMPLE (MW11)

2012/06 Newly Added

* *根據註冊記錄 In accordance with the registration record*

己部 由他人代為豎設招牌的人士的詳情
Part F *（只在工程涉及豎設招牌時適用，並由他人代為豎設招牌的人士填寫）*
Particulars of the person for whom the signboard is to be erected
(Only applicable to works involving the erection of a signboard and to be completed by the person for whom the signboard is to be erected)

☑ **當由他人代為豎設招牌的人士的詳情已在上述呈交編號呈交文件內的 MW01 表格內提供時**
Where the particulars of the person for whom the signboard is to be erected had been provided in the Form MW01 submitted under the submission with the above mentioned submission number

本人/我們 喜招牌
中文名稱 Name in Chinese

I/We, SIGNBOARD OWNER
英文名稱 *（如有，姓氏先行）* Name in English *(Surname first, if any)*

英文名稱 *（如有，姓氏先行）（續）* Name in English *(Surname first, if any) (Cont'd)*

為上述呈交編號呈交文件內由他人代為豎設招牌的人士，現按照《建築物（小型工程）規例》第 36(a)(v)條的規定，確認本人/我們亦同時是**甲部**所述工程的由他人代為豎設招牌的人士，而本人的詳情已在上述呈交編號呈交文件內提供。
am/are the person for whom the signboard is to be erected detailed in the submission with the above mentioned submission number, in accordance with the provisions of section 36(a)(v) of the Building (Minor Works) Regulation, hereby confirm that I am/we are also the person for whom the signboard is to be erected detailed in **Part A**, and my particulars had been provided in the submission with the above mentioned submission number.

☐ **當上述呈交編號呈交文件內的 MW01 表格內的工程並不涉及豎設招牌時**
Where the works stated in the Form MW01 submitted under the submission with the above mentioned submission number do not involve the erection of a signboard

中文名稱 Name in Chinese

英文名稱 *（如有，姓氏先行）* Name in English *(Surname first, if any)*

英文名稱 *（如有，姓氏先行）（續）* Name in English *(Surname first, if any) (Cont'd)*

☐ 香港身份證號碼 HKID Number ☐ 商業登記號碼 Business Registration Number ☐ 護照號碼 Passport Number
☐ 其他 *（請註明）* Others *(Please specify)*

護照簽發國家 *（如適用）* Country of issue of passport *(If applicable)*

通訊地址 Correspondence Address

傳真號碼 Fax Number

聯絡電話 Contact Number

電郵地址 E-mail Address

喜招牌

由他人代為豎設招牌的人士 簽署 *（如適用）* 蓋上公司印鑑
Signature of the person for whom the signboard is to be erected & affixed with company seal *(if applicable)*

日 *day* 05 月 *month* 07 年 *year* 2012

COMPLETED BY THE PERSON FOR WHOM THE SIGNBOARD IS TO BE ERECTED

SAMPLE MW 11

2012/06 Newly Added

Optional Page - To be submitted when any parts is completed

125Z

庚部 當進行的工程可能涉及公用地方時，相關業主立案法團或物業管理公司的詳情
Part G *（只在工程可能涉及公用地方時適用，並由已獲委任的認可人士或註冊檢驗人員填寫）*
Particulars of the corresponding Owners' Corporations or Property Management Company where the works to be carried out may involve common parts
(Only applicable where the works to be carried out may involve common parts and to be completed by the authorized person or registered inspector appointed)

☑ 當業主立案法團或物業管理公司的詳情已在上述呈交編號呈交文件內的 MW01 表格內提供時，
Where the particulars of the Owners' Corporations or Property Management Company had been provided in the Form MW01 submitted under the submission with the above mentioned submission number

☐ 當業主立案法團或物業管理公司的詳情未在上述呈交編號呈交文件內的 MW01 表格內提供時，
Where the particulars of the Owners' Corporations or Property Management Company had not been provided in the Form MW01 submitted under the submission with the above mentioned submission number

業主立案法團或物業管理公司 名稱及其通訊地址
Name & Correspondence Address of Owners' Corporations or Property Management Company

傳真號碼 Fax Number

聯絡電話 Contact Number

電郵地址 E-mail Address

COMPLETED BY THE AUTHORIZED PERSON OR REGISTERED INSPECTOR

SAMPLE MW11

屋宇署 BUILDINGS DEPARTMENT

MW12

簡化規定下的新增小型工程展開通知書（沒有委任訂明建築專業人士）
NOTICE OF COMMENCEMENT OF ADDITIONAL MINOR WORKS UNDER THE SIMPLIFIED REQUIREMENTS (WITHOUT PRESCRIBED BUILDING PROFESSIONAL APPOINTED)

本表格及所有證明文件最遲須在展開新增的小型工程項目前 7 天呈交
This form and all supporting document(s) must be submitted not less than 7 days before the commencement of the additional minor works item(s)

請以正楷填寫表格，並在適當方格內加上『✓』號。填寫前，請仔細閱讀《注意事項》。
Please read the "Matters to Note", complete the form in BLOCK LETTERS and tick in the appropriate box(es).

致建築事務監督
To the Building Authority

甲部　訂明註冊承建商的委任通知 *（由安排進行小型工程的人填寫）*
Part A Notice of appointment of the prescribed registered contractor
(To be completed by the person who arranged for the minor works to be carried out)

MW 1 2 0 7 1 1 1 4 7
小型工程呈交編號
Minor Works Submission Number
必須填寫 MUST COMPLETE

本人/我們 請 仁 造
中文名稱 Name in Chinese

I/We, CHING YAN CHO
英文名稱 *（如有，姓氏先行）* Name in English *(Surname first, if any)*

英文名稱 *（如有，姓氏先行）（續）* Name in English *(Surname first, if any) (Cont'd)*

為上述呈交編號呈交文件內安排進行小型工程的人，根據《建築物（小型工程）規例》第 28 條的規定，本人/我們已就本部所述的工程，委任上述呈交編號呈交文件內已獲委任的訂明註冊承建商，作為訂明註冊承建商。
am/are the person who arranged for the minor works to be carried out under the submission with the above mentioned submission number, in accordance with the provisions of section 28 of the Building (Minor Works) Regulation, I/we have appointed the prescribed registered contractor appointed under the submission with the above mentioned submission number, as prescribed registered contractor in respect of the works detailed in this Part.

擬在上述呈交編號呈交文件內相同位置或地址進行新增的小型工程的詳情
Details of the proposed additional minor works to be carried out at the same location or address under the submission with the above mentioned submission number

☐ 另加附加頁　張
Additional __ Page added

小型工程項目 Minor works Item	描述 Description	（如有）請提供相關命令 / 指示 / 通知 / 屋宇署檔案 編號 Relevant Order / Direction / Notice / BD Reference Number (if available)
2.15	REPAIR OF EXTERNAL REINFORCED CONCRETE WALL OF XYZ MANSION	
2.23	REPLACEMENT OF THE DISPLAY SURFACE OF SIGNBOARD PROJECTING FROM EXTERNAL WALL OF XYZ MANSION FACING SOY STREET, DOES NOT CONSIST OF STONE, WITH DISPLAY AREA OF 15 M^2	
2.18	ERECTION OF SIGNBOARD PROJECTING FROM EXTERNAL WALL OF XYZ MANSION FACING SOY STREET, DOES NOT CONSIST OF STONE, WITH DISPLAY AREA OF 11 M^2	

各項小型工程項目及其描述（包括性質、位置和數量）必須提供。如空位不敷應用，請另加紙張填寫，附於本通知書內，並在每頁加簽、註明日期及*（如適用）*蓋上公司印鑑。
Every minor works item and its description (including the nature, location and quantity) shall be provided. If space is insufficient, please attach additional sheet(s) which must be signed, dated and affixed with company seal *(if applicable)*.

請 仁 造

安排進行小型工程的人 簽署*（如適用）*蓋上公司印鑑
Signature of the person who arranged for the minor works to be carried out & affixed with company seal *(if applicable)*

2 0 0 7　20 1 2
日 月 年
day month year

COMPLETED BY THE PERSON WHO ARRANGED FOR THE MINOR WORKS TO BE CARRIED OUT

2012/06 Newly Added

SAMPLE MW12

COMPLETED BY THE PRESCRIBED REGISTERED CONTRACTOR

乙部 訂明註冊承建商的委任確認書 *（由已獲委任的訂明註冊承建商填寫）*
Part B Confirmation of appointment by the prescribed registered contractor
(To be completed by the prescribed registered contractor appointed)

我們 大牌成建雙建築有限公司
中文名稱* Name in Chinese*

We, TAI PAI SING GIN SOENG CONSTRUCTION COMPANY
英文名稱* Name in English*

LIMITED,
英文名稱* *（續）* Name in English* *(Cont'd)*

為上述呈交編號呈交文件內的已獲委任的訂明註冊承建商，根據《建築物（小型工程）規例》第 33 條及第 37 條的規定，
are the prescribed registered contractor appointed under the submission with the above mentioned submission number, in accordance with the provisions of sections 33 and 37 of the Building (Minor Works) Regulation,

1. 確認我們已獲委任為**甲部**所述工程的訂明註冊承建商；
confirm that we have been appointed as the prescribed registered contractor of the works detailed in **Part A**;

2. 確認**甲部**所述的小型工程將於 27 07 2012 展開；
confirm that the minor works detailed in **Part A** are to be commenced on 日 *day* 月 *month* 年 *year*;

3. 現呈交顯示**甲部**所述工程的訂明圖則及詳圖，和處所實際狀況的照片；
submit herewith the prescribed plans and details of the works detailed in **Part A**, and the photographs showing the physical condition of the premises where the works detailed in **Part A** are to be carried out;

4. 確認在本部呈交的訂明圖則及詳圖，均由我們製備和簽署（作為已簽署有關圖則的人，我們同意為該等圖則負起《建築物條例》下的所有責任）；
confirm that the prescribed plans and details submitted under this Part, have been prepared and signed by us (as the person who has signed the plans, we agree to assume all responsibilities under the Buildings Ordinance regarding the plans);

5. 當**甲部**所述工程包括對任何建築物進行修葺、改動或加建時，已核證以下事宜：在檢查該建築物後，我們認為該建築物有能力承受因工程而可能有所增加或在任何方面有所改動的荷載及應力；及
where the works detailed in **Part A** comprise repairs, alterations or additions to any building, certified that, after inspecting the building, we are of the opinion that the building is capable of bearing the loads and stresses which may be increased or altered in any way as a result of the works; and

6. 當**甲部**所述工程涉及豎設招牌時，確認由他人代為豎設招牌的人士已在**丙部**提供建築事務監督所要求的詳情。
where the works detailed in **Part A** involve the erection of a signboard, confirm that the person for whom the signboard is to be erected has provided the particulars of the person as required by the Building Authority in **Part C**.

授權仁
獲授權簽署人之中文姓名* Name in Chinese of the authorized signatory*

AUTHORIZED SIGNATORY
獲授權簽署人之英文姓名* Name in English of the authorized signatory*

ABC 456789/2009
註冊證明書編號*
Certificate of Registration Number*

2666 1234
傳真號碼* Fax Number*

2666 1235
聯絡電話 Contact Number

☑ 願意接收短訊通知
Willing to receive Short Messaging Service (SMS) Notification

註冊屆滿日期* Date of expiry of registration* 31 01 2013 日 *day* 月 *month* 年 *year*

A. Signatory
訂明註冊承建商（獲授權簽署人）簽署*
Signature* of the prescribed registered contractor (authorized signatory)

20 07 2012 日 *day* 月 *month* 年 *year*

SAMPLE MW12

* *根據註冊記錄 In accordance with the registration record*

丙部 由他人代為豎設招牌的人士的詳情
Part C *（只在甲部所述工程涉及豎設招牌時適用，並由他人代為豎設招牌的人士填寫）*
Particulars of the person for whom the signboard is to be erected
(Only applicable to works detailed in Part A involving the erection of a signboard and to be completed by the person for whom the signboard is to be erected)

☐ **當由他人代為豎設招牌的人士的詳情已在上述呈交編號呈交文件內的 MW03 表格內提供時**
Where the particulars of the person for whom the signboard is to be erected had been provided in the Form MW03 submitted under the submission with the above mentioned submission number

本人/我們 _____
中文名稱 Name in Chinese

I/We, _____
英文名稱 *（如有，姓氏先行）* Name in English *(Surname first, if any)*

_____,
英文名稱 *（如有，姓氏先行）（續）* Name in English *(Surname first, if any) (Cont'd)*

為上述呈交編號呈交文件內由他人代為豎設招牌的人士，現按照《建築物（小型工程）規例》第 36(a)(v)條的規定，確認本人/我們亦同時是**甲部**所述工程的由他人代為豎設招牌的人士，而本人的詳情已在上述呈交編號呈交文件內提供。
am/are the person for whom the signboard is to be erected detailed in the submission with the above mentioned submission number, in accordance with the provisions of section 36(a)(v) of the Building (Minor Works) Regulation, hereby confirm that I am/we are also the person for whom the signboard is to be erected detailed in **Part A**, and my particulars had been provided in the submission with the above mentioned submission number.

☑ **當上述呈交編號呈交文件內的 MW03 表格內的工程並不涉及豎設招牌時**
Where the works stated in the Form MW03 submitted under the submission with the above mentioned submission number do not involve the erection of a signboard

喜招牌
中文名稱 Name in Chinese

SIGNBOARD OWNER
英文名稱 *（如有，姓氏先行）* Name in English *(Surname first, if any)*

_____,
英文名稱 *（如有，姓氏先行）（續）* Name in English *(Surname first, if any) (Cont'd)*

8450388 2
☐ 香港身份證號碼 HKID Number ☑ 商業登記號碼 Business Registration Number ☐ 護照號碼 Passport Number
☐ 其他 *（請註明）* Others *(Please specify)* _____

_____
護照簽發國家 *（如適用）* Country of issue of passport *(If applicable)*

通訊地址 Correspondence Address

FLAT A, 1/F., AND 2/F.,
XYZ MANSION,
456 SOY STREET,
KOWLOON

2993456 8
傳真號碼 Fax Number

2993456 7
聯絡電話 Contact Number

_____
電郵地址 E-mail Address

喜招牌
由他人代為豎設招牌的人士 簽署 *（如適用）* 蓋上公司印鑑
Signature of the person for whom the signboard is to be erected & affixed with company seal *(if applicable)*

2007 20 12
日 月 年
day month year

COMPLETED BY THE PERSON FOR WHOM THE SIGNBOARD IS TO BE ERECTED

2012/06 Newly Added

Optional Page - To be submitted when any parts is completed

SAMPLE MW12

COMPLETED BY THE PRESCRIBED REGISTERED CONTRACTOR

丁部 當進行的工程可能涉及公用地方時，相關業主立案法團或物業管理公司的詳情
Part D *（只在工程可能涉及公用地方時適用，並由已獲委任的訂明註冊承建商填寫）*
Particulars of the corresponding Owners' Corporations or Property Management Company where the works to be carried out may involve common parts
(Only applicable where the works to be carried out may involve common parts and to be completed by the prescribed registered contractor appointed)

☐ 當業主立案法團或物業管理公司的詳情已在上述呈交編號呈交文件內的 MW03 表格內提供時，
Where the particulars of the Owners' Corporations or Property Management Company had been provided in the Form MW03 submitted under the submission with the above mentioned submission number

☑ 當業主立案法團或物業管理公司的詳情未在上述呈交編號呈交文件內的 MW03 表格內提供時，
Where the particulars of the Owners' Corporations or Property Management Company had not been provided in the Form MW03 submitted under the submission with the above mentioned submission number

業主立案法團或物業管理公司 名稱及其通訊地址
Name & Correspondence Address of Owners' Corporations or Property Management Company

INCORPORATED OWNERS OF XYZ MANSION
6/F, XYZ MANSION,
456 SOY STREET,
KOWLOON

傳真號碼 Fax Number: 26634568

聯絡電話 Contact Number: 26634567

電郵地址 E-mail Address:

SAMPLE MW12

2012/06 Newly Added

* *根據註冊記錄 In accordance with the registration record*

Optional Page - To be submitted when any parts is completed

屋宇署 BUILDINGS DEPARTMENT

MW31

簡化規定下訂明建築專業人士不再獲委任或提名的通知書
NOTICE OF PRESCRIBED BUILDING PROFESSIONAL ON CEASING TO BE APPOINTED OR NOMINATED UNDER THE SIMPLIFIED REQUIREMENTS

本表格最遲須在不再獲委任或提名的日期後 7 天內呈交
This form must be submitted within 7 days after the date of cessation or nomination

請以正楷填寫表格，並在適當方格內加上『✓』號。填寫前，請仔細閱讀《注意事項》。
Please read the "Matters to Note", complete the form in BLOCK LETTERS and tick in the appropriate box(es).

致建築事務監督
To the Building Authority

不再獲委任或提名的訂明建築專業人士的通知書
（由不再獲委任或提名的訂明建築專業人士填寫）
Notice of the prescribed building professional on ceasing to be appointed or nominated *(To be completed by the prescribed building professional ceased to be appointed or nominated)*

MW 1 2 0 7 0 8 8 8 8
小型工程呈交編號
Minor Works Submission Number
必須填寫 MUST COMPLETE

本人 認可仁 為上述呈交編號的已獲委任或提名的
中文姓名*Name in Chinese*

I, YING HO YAN, am the
英文姓名*Name in English*

☑ 認可人士 authorized person / ☐ 註冊檢驗人員 registered inspector · ☐ 註冊結構工程師 registered structural engineer · ☐ 註冊岩土工程師 registered geotechnical engineer ·

按照《建築物（小型工程）規例》第 50 條的規定，呈交此通知，述明我自
appointed or nominated in the above mentioned submission number, in accordance with the provisions of section 50 of the Building (Minor Works) Regulation, submit herewith this notice of the fact that, with effect from

16 07 2012 起，不再獲委任或提名為上述小型工程編號呈交文件內小型工程的訂明建築專業人士；並確認上述呈交編號呈
日 月 年 day month year, I have ceased to be appointed or nominated as the prescribed building professional of the minor works detailed in

交文件內下述的小型工程已在本人的監督下，按照《建築物條例》及已呈交的訂明圖則及詳圖進行。
the submission with the above mentioned submission number; and confirm that the following minor works under the submission with the above mentioned submission number have been carried out in accordance with the Buildings Ordinance and the submitted prescribed plans and details under my supervision.

☐ 另加附加頁 張
Additional __ Page added

小型工程項目 Minor works Item	描述 Description	（如有） 請提供相關命令 / 指示 / 通知 / 屋宇署檔案 編號 Relevant Order / Direction / Notice / BD Reference Number (if available)
1.17	REPAIR OF CANTILEVERED REINFORCED CONCRETE CANOPY ON 1/F	

各項小型工程項目及其描述（包括性質、位置和數量）必須提供。如空位不敷應用，請另加紙張填寫，附於本通知書內，並在每頁加簽及註明日期。
Every minor works item and its description (including the nature, location and quantity) shall be provided. If space is insufficient, please attach additional sheet(s) which must be signed and dated.

2 1 2 3 4 5 6 6
傳真號碼* Fax Number*

2 1 2 3 4 5 6 5
聯絡電話 Contact Number

☑ 願意接收短訊通知
Willing to receive Short Messaging Service (SMS) Notification

A P(A) 9 9 9 9 / 9 9
註冊證明書編號*
Certificate of Registration Number*

註冊屆滿日期* 04 07 2013
Date of expiry of registration* 日 月 年 day month year

認可仁
不再獲委任或提名的訂明建築專業人士 簽署*
Signature* of the prescribed building professional ceased to be appointed or nominated

18 07 2012
日 月 年 day month year

COMPLETED BY THE AUTHORIZED PERSON OR REGISTERED INSPECTOR

* *根據註冊記錄 In accordance with the registration record*

2012/06 Newly Added

SAMPLE MW31

屋宇署 BUILDINGS DEPARTMENT

MW32

簡化規定下有關豎設或改動第 III 級別小型工程的招牌的呈交編號申請書
REQUEST FOR SUBMISSION NUMBER FOR CLASS III MINOR WORKS RELATING TO THE ERECTION OR ALTERATION OF SIGNBOARD UNDER THE SIMPLIFIED REQUIREMENTS

請以正楷填寫表格，並在適當方格內加上『✓』號。填寫前，請仔細閱讀《注意事項》。
Please read the "Matters to Note", complete the form in BLOCK LETTERS and tick in the appropriate box(es).

致建築事務監督
To the Building Authority

只供屋宇署填寫 For Buildings Department's Use only

小型工程呈交編號 →
Minor Works Submission Number

甲部 豎設或改動招牌工程的初步資料 *(由已獲委任的訂明註冊承建商填寫)*
Part A Preliminary information of the erection or alteration works of signboard
(To be completed by the prescribed registered contractor appointed)

1. 擬進行小型工程的位置或地址
Location or Address of the proposed minor works to be carried out

EXTERNAL WALL ON 1/F FACING SOY STREET,
ABC MANSION,
442 SOY STREET,
MONG KOK

徵收差餉及/或地租通知書左上角的帳目編號
The Account Number printed on the top left-hand corner of the Demand for Rates and/or Government Rent

1 2 3 4 5 6 7 8 9 1 2 3 4 5 6 7 8 9 0

為方便確定工程位置或地址，可選擇提供
Optional for easy identification of the location or address of the works

2. 擬進行的招牌工程的詳情
Details of the proposed signboard works to be carried out

☐ 另加附加頁 張
Additional __Page added

*只限於《建築物(小型工程)規例》附表 1 第 3 部小型工程一覽表內項目 **3.16** 及 **3.17** 內所述的**豎設及改動招牌工程***
*Restricted to the **erection and alteration works of signboard** described under items **3.16** and **3.17** of the List of Minor Works in Part 3 of Schedule 1 of the Building (Minor Works) Regulation*

小型工程項目 Minor works Item	描述 Description	(如有) 請提供相關命令 / 指示 / 通知 / 屋宇署檔案 編號 Relevant Order / Direction / Notice / BD Reference Number (if available)
3.17	ERECTION OF 3 NOS. OF WALL SIGNBOARD, ON THE EXTERNAL WALL OF 1/F FACING SOY STREET, EACH OF THEM WITH DISPLAY AREA OF 4 M^2	
3.17	ALTERATION OF EXISTING WALL SIGNBOARD, ON THE EXTERNAL WALL OF 1/F FACING SOY STREET, WITH DISPLAY AREA OF 3 M^2	

各項小型工程項目及其描述(包括性質、位置和數量)必須提供。如空位不敷應用，請另加紙張填寫，附於本通知書內，並在每頁加簽、註明日期及*(如適用)*蓋上公司印鑑。
Every minor works item and its description (including the nature, location and quantity) shall be provided. If space is insufficient, please attach additional sheet(s) which must be signed, dated and affixed with company seal *(if applicable)*.

工程預計將分別於 14 07 2012 (日 月 年) 及 16 07 2012 (日 月 年) 展開及完成。
The works are expected to be carried out and completed on (day month year) and (day month year) respectively.

工程涉及豎設和改動的招牌數量分別為 3 個及 1 個。
The number of signboard to be erected and altered are 3 and 1 respectively.

COMPLETED BY THE PRESCRIBED REGISTERED CONTRACTOR

SAMPLE MW32

3. 安排進行小型工程的人的詳情
Particulars of the person who arranged for the minor works to be carried out

謝仁造
中文名稱 Name in Chinese

CHING YAN CHO
英文名稱（如有，姓氏先行） Name in English *(Surname first, if any)*

英文名稱（如有，姓氏先行）（續） Name in English *(Surname first, if any) (Cont'd)*

4. 由他人代為豎設招牌的人士的詳情
Particulars of the person for whom the signboard is to be erected

業招牌
中文名稱 Name in Chinese

SIGNBOARD OWNER
英文名稱（如有，姓氏先行） Name in English *(Surname first, if any)*

英文名稱（如有，姓氏先行）（續） Name in English *(Surname first, if any) (Cont'd)*

乙部 訂明註冊承建商的申請書
Part B Request of the prescribed registered contractor

本人/我們 大牌成建築建築有限公司
中文名稱* Name in Chinese*

I/We, TAI PAI SING GIN SOENG CONSTRUCTION COMPANY
英文名稱* Name in English*

LIMITED,
英文名稱*（續） Name in English* *(Cont'd)*

為甲部所述工程的已獲委任的訂明註冊承建商，
am /are the prescribed registered contractor appointed for the works detailed in Part A,

1. 就甲部所述工程，呈交甲部所述的初步資料，以申請一個呈交編號以展示在豎設或被改動的招牌上；
submit the preliminary information detailed in Part A to request for a submission number for the works detailed in Part A to be displayed on the signboard to be erected or altered;

2. 明白及了解：
understand and realize that:

本申請書並非簡化規定下的呈交，獲得呈交編號並不代表已符合《建築物（小型工程）規例》第 6 部內簡化規定的要求；
this request is not a submission under the simplified requirements, obtaining the submission number is not equivalent to compliance in accordance with provisions of the simplified requirements in Part 6 of the Building (Minor Works) Regulation;

根據《建築物（小型工程）規例》第 36 條的規定，MW05 表格最遲須在甲部所述工程完成後的 14 天內再另行呈交；
a notification in Form MW05 should be submitted separately within 14 days after the completion of the works detailed in Part A in accordance with section 36 of Building (Minor Works) Regulation;

獲得的呈交編號只能用於展示在甲部所述位置或地址內豎設或被改動的招牌上；及
the minor works submission number obtained can only be used for displaying on the signboards to be erected or altered at the location or address detailed in Part A; and

在招牌上展示的小型工程呈交編號，應參照《註冊承建商作業備考》編號 71 內的標準及指引。
the displaying of the minor works submission number on the signboard should follow the standards and guideline in the Practice Note for Registered Contractors No.71.

授權仁
獲授權簽署人之中文姓名* Name in Chinese of the authorized signatory*

AUTHORIZED SIGNATORY
獲授權簽署人之英文姓名* Name in English of the authorized signatory*

ABC 456789/2009
註冊證明書編號*
Certificate of Registration Number*

2666123 4
傳真號碼* Fax Number*

2666123 5
聯絡電話 Contact Number

☑ 願意接收短訊通知
Willing to receive Short Messaging Service (SMS) Notification

註冊屆滿日期* Date of expiry of registration* 31 01 2013
日 月 年
day month year

A. Signatory
訂明註冊承建商（獲授權簽署人）簽署*
Signature* of the prescribed registered contractor (authorized signatory)

30 06 2012
日 月 年
day month year

COMPLETED BY THE PRESCRIBED REGISTERED CONTRACTOR

2012/06 Newly Added

* 根據註冊記錄 *In accordance with the registration record*

SAMPLE MW32

屋宇署 BUILDINGS DEPARTMENT

MW33

呈交簡化規定下的補充文件或資料
SUBMISSION OF SUPPLEMENTARY DOCUMENTS OR INFORMATION UNDER THE SIMPLIFIED REQUIREMENTS

請以正楷填寫表格，並在適當方格內加上『✓』號。填寫前，請仔細閱讀《注意事項》。
Please read the "Matters to Note", complete the form in BLOCK LETTERS and tick in the appropriate box(es).

致建築事務監督
To the Building Authority

MW 1 2 0 7 0 7 7 7 7
小型工程呈交編號
Minor Works Submission Number
必須填寫 MUST COMPLETE

本人/我們 檢驗仁
中文名稱*Name in Chinese*

I/We, KIM YIM YAN
英文名稱* Name in English*

英文名稱* *(續)* Name in English**(Cont'd)*

為上述呈交編號呈交文件內的已獲委任人，現就上述呈交編號內的小型工程呈交下述的補充文件或資料：
am/are the appointed person of the submission with the above mentioned submission number, submit herewith the following supplementary document(s) or information for the minor works detailed in the above mentioned submission number:

- ☑ 顯示工程處所在工程前實際狀況的照片 photographs showing the physical condition of the premises before the commencement of works
- ☑ 經修訂的訂明圖則及詳圖 revised prescribed plans and details
- ☐ 結構評估報告 structural appraisal report
- ☐ 拆卸建議計劃書 Demolition Proposal
- ☐ 物料發票、測試報告或證書 material invoice, test certificate or report
- ☐ 監工計劃書 supervision plan
- ☐ 顯示所有已完成工程的照片 photographs showing all works as completed
- ☐ 結構計算資料 structural calculations
- ☐ 岩土評估報告 geotechnical appraisal report
- ☐ 臨時保護或鞏固工程 temporary safety measures or support
- ☐ 資料目錄 catalogue
- ☐ 其他 Others

☐ 認可人士 authorized person
☑ 註冊檢驗人員 registered inspector
☐ 註冊結構工程師 registered structural engineer
☐ 註冊岩土工程師 registered geotechnical engineer
☐ 訂明註冊承建商 prescribed registered contractor

獲授權簽署人之中文姓名* *(如適用)* Name in Chinese of the authorized signatory* *(If applicable)*

獲授權簽署人之英文姓名* *(如適用)* Name in English of the authorized signatory* *(If applicable)*

2 1 2 3 4 5 6 1
傳真號碼* Fax Number*

2 1 2 3 4 5 6 0
聯絡電話 Contact Number

☑ 願意接收短訊通知 Willing to receive Short Messaging Service (SMS) Notification

R E (S) 1 7 7 7 / 7 7
註冊證明書編號*
Certificate of Registration Number*

註冊屆滿日期* Date of expiry of registration* 0 3 0 2 20 1 7 (日 day 月 month 年 year)

檢驗仁
獲委任人 簽署*
Signature* of the appointed person

1 8 0 7 20 1 2 (日 day 月 month 年 year)

* *根據註冊記錄 In accordance with the registration record*

SAMPLE MW33

2012/06 Newly Added

Appendix VI – Preferred Colours for Colouring of Plans

Material	Preferred Colour	BS 5252 Identification Code
Earth (unexcavated)	Fawn	06 C 33
Harcord or dry fill	Brown	06 C 39
Brick	Red	04 E 55
Concrete (plain or reinforced)	Green	14 E 53
Solid concrete blocks	Blue	20 E 56
Hollow concrete blocks	Mauve	24 E 53
Lightweight partition (e.g. plasterboard)	Orange	06 E 55
Plaster or Cement rendering	Magnolia	08 E 49
Mosaic or other non-absorbent floor tiles	Pink	02 E 33
Mosaic or other non-absorbent wall tiles	Lemon	10 E 50
Glass	Blue	20 E 50
Timber doors	Brown	06 D 44
Metalwork	Grey	00 A 03
Steel	Purple	24 C 39
Sanitary fittings	Yellow	10 E 55
Provision for the disabled e.g. toilets, lifts, ramps	Green	12 E 53

Notes:

1. Ducts, light-wells and lift shafts should be left uncoloured.
2. For elevations and the larger plan areas, colouring may be in lighter washes of the preferred colours in order to avoid a garish effect e.g. concreted, tiled or plastered areas.
3. A light colour wash should be used to identify phased development.
4. A colour legend or key should be added to all sets of drawings.

GENERAL NOTES FOR BAMBOO SCAFFOLDS :

The contractor is recommended to refer to the following documents regarding their use :

1. Schedule 3 of the Construction Sites (Safety) Regulations for the requirements of working platform.
2. Code of Practice for Bamboo Scaffolding Safety issued by the Labour Department.
3. Guidelines on the Design and Construction of Bamboo Scaffolds issued by the Buildings Department.
4. Guidelines for the Removal of Typical Unauthorized Building Works and General Maintenance of External Walls issued by the Buildings Department.

REMARKS :

After the erection of the bamboo scaffold, the contractor needs to fill in the bamboo notification form (can be found in document (3) above) and fax to the Site Monitoring Section of the Buildings Department.

BELOW ARE THE COMMONLY USED BAMBOO SCAFFOLDS FOR REFERENCE.

(Ref.4 Figure 2)

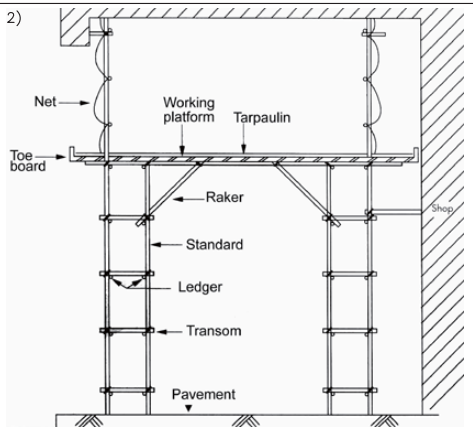

Figure 1 : Double row bamboo scaffold and working platform over pavement

(Ref.3 Diagram 5)

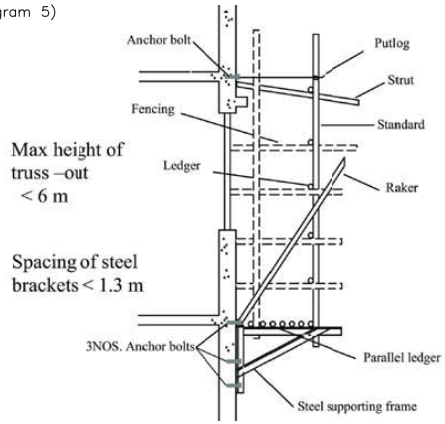

(Ref.3 Diagram 8)

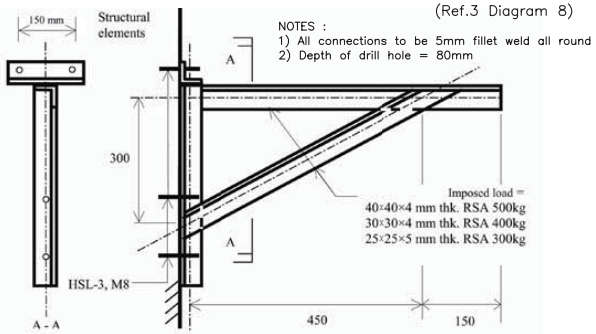

There may be occasions that a post of a bamboo scaffold does not rest on the steel bracket, the design engineer should ensure that the loading from the misaligned post can be effectively transferred to the steel bracket.

Base support for truss–out scaffold

Figure 2 : Truss–out bamboo scaffold

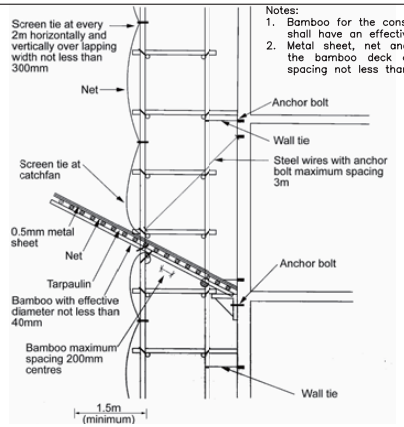

Notes:
1. Bamboo for the construction of scaffold and catchfan shall have an effective diameter not less than 40mm.
2. Metal sheet, net and tarpaulin shall be fastened to the bamboo deck at corners of the sheet or at spacing not less than 1.5mm apart whichever is less.

(Ref.4 Figure 5)

Figure 3 : Typical detail for bamboo catchfan and screen cover

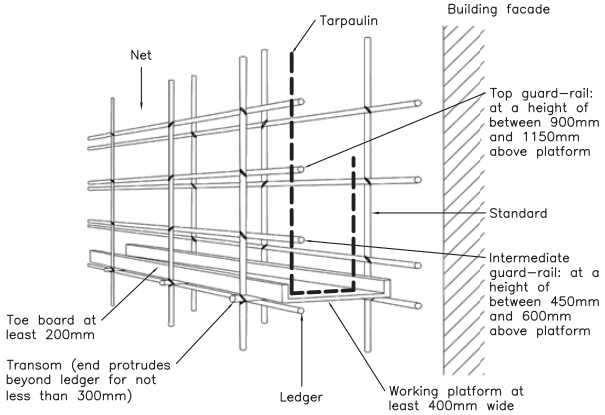

Figure 4 : Working platform on a double–row bamboo scaffold

(Ref.3 Diagram 6)

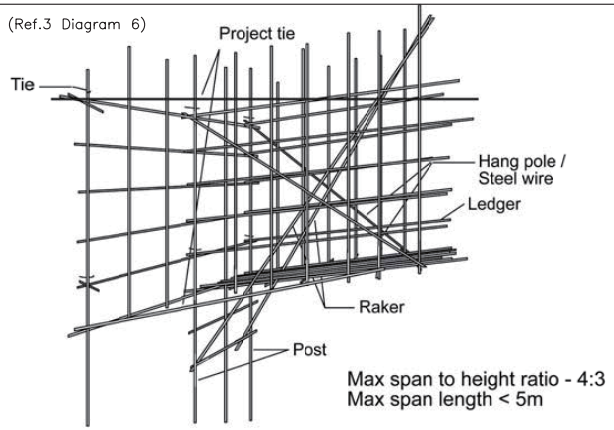

Figure 5 : Bamboo scaffold for signboard

DRAWING NO. GN-1	GENERAL NOTES FOR BAMBOO SCAFFOLDING

GENERAL NOTES FOR METAL SCAFFOLDS :

The contractor is recommended to refer to the following documents regarding their use :

1. Schedule 3 of the Construction Sites (Safety) Regulations for the requirements of working platform.
2. Code of Practice for Metal Scaffolding Safety issued by the Labour Department.
3. Guidelines for the Removal of Typical Unauthorized Building Works and General Maintenance of External Walls issued by the Buildings Department.

BELOW IS THE COMMONLY USED METAL SCAFFOLDS FOR REFERENCE.

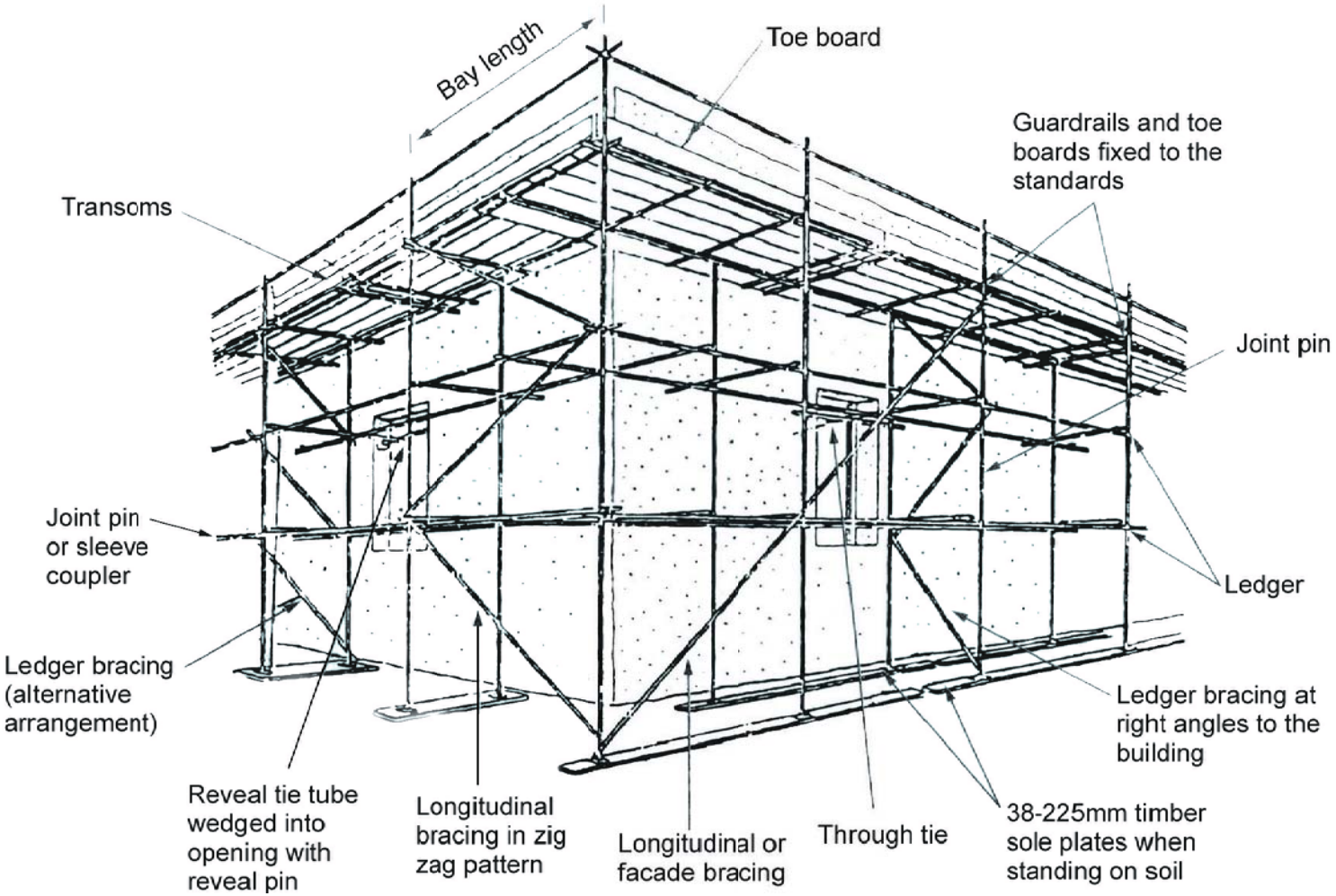

DRAWING NO. GN-2	GENERAL NOTES FOR METAL SCAFFOLDING

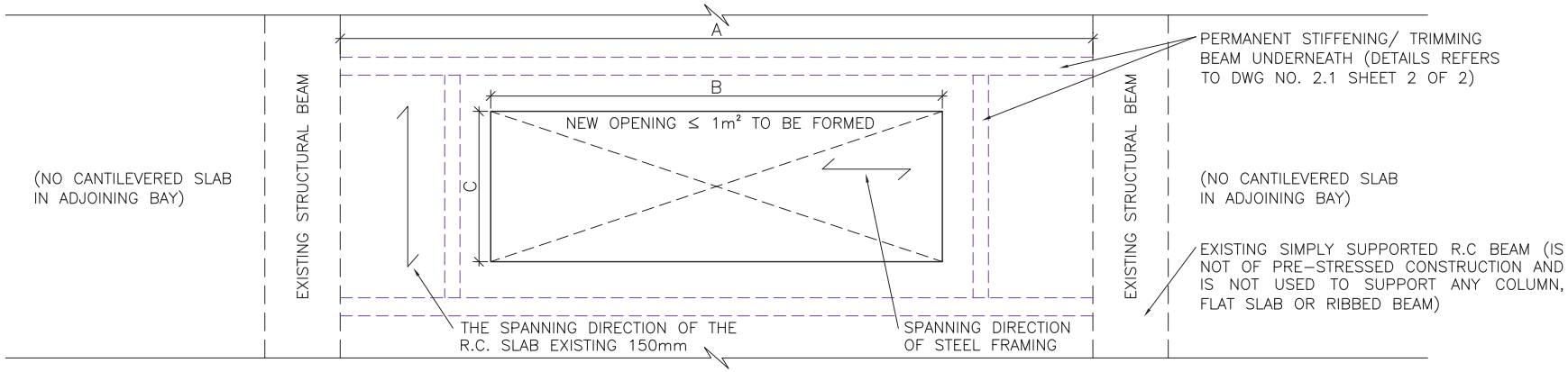

GENERAL NOTES :

1. The works carried out shall comply with the Buildings Ordinance and the provisions of other enactment. (Reference can be made to the examples listed in Sections 3 and 10 of the Guidelines.)
2. All works shall comply with the following CoP/ standards:
   - Building (Construction) Regulations
   - Code of Practice for the Structural Use of Concrete 2004
   - Code of Practice for the Structural Use of Steel 2005
   - Code of Practice for Fire Resisting Construction 1996
3. All structural steel to be grade S275 class 1 to BS EN 10210 for hollow sections and BS EN 10025 for other sections and shall be hot dip galvanized to BS EN ISO 1461 to at least 85 microns thick.
4. All welds should be comply with BS EN 1011 and all welding works to be carried out by qualified welder.
5. All connections to be 3mm fillet weld all round or butt weld with weld strength, pw = 220 N/mm² (Electrode Class 50) and all electrodes to BS EN ISO 2560.
6. All anchor bolts to be Hilti HSC–AR M10x40 and shall be installed according to the manufacturer's specification.
7. Concrete shall comply with CS1: 1990
8. All steel members shall be protected with "UNITHERM 38091" fire resistance paint or equivalent to provide with the required FRP of parent structure.

DESIGN DIMENSIONS :

A = 3m, B = 2m, C = 0.5m

DESIGN LOADS :

1. Original Dead Load = 3.60 kN/m²
2. Original Finish = 1.00 kN/m²
3. Original Live Load = 2.50 kN/m²

PREPARATION WORKS :

1. The contractor is required to submit the method statement to the Building Authority prior to the commencement of demolition works.
2. Obtain the existing design drawings/ information for reference prior to the commencement of works.
3. Carry out condition survey of the parent structure/ existing condition and submit structural design/ justification prior to the commencement of works.
4. Spanning direction(s) of existing slab to be checked from existing design drawing.
5. The existing parent structure must be checked to the satisfaction of structural adequacy prior to the installation of minor works item.

SAFETY AND PRECAUTIONARY MEASURES :

1. Fence–off the working area from the public. Diversion arrangement shall be taken if necessary.
2. Prior to the commencement of works, the contractor is recommended to refer to Section 4 (Method of Demolition) of the Code of Practice for Demolition of Buildings for details of works.
3. Temporary Propping System shall be used to support the operation of concrete breaking or other loading during the demolition process on a suspended slab.

WORKING PROCEDURES :

1. Erect the permanent stiffening/ trimming beam and temporary proppings.
2. Break–off the existing concrete slab into small piece using mechanical hand–held tools to expose the reinforcing bars.
3. Cut the exposed reinforcement and form the edge of the new opening. Scrap the surface of concrete edge for receiving the new concrete.
4. Pour concrete after erecting formwork and reinforcing bar.
5. 48 hours after concrete casting, remove the formwork and back propping the slab with proper curing works. Remove the back propping until full strength of concrete is reached.
6. Arrange construction waste disposal.
7. Make good and reinstate the affected areas of the parent structure and clean the site.

Remarks : This case excludes item 1 of the Designated Exempted Works.

MINOR WORKS ITEM 2.1	FORMATION OF OPENING IN A SLAB	SHEET 1 OF 2

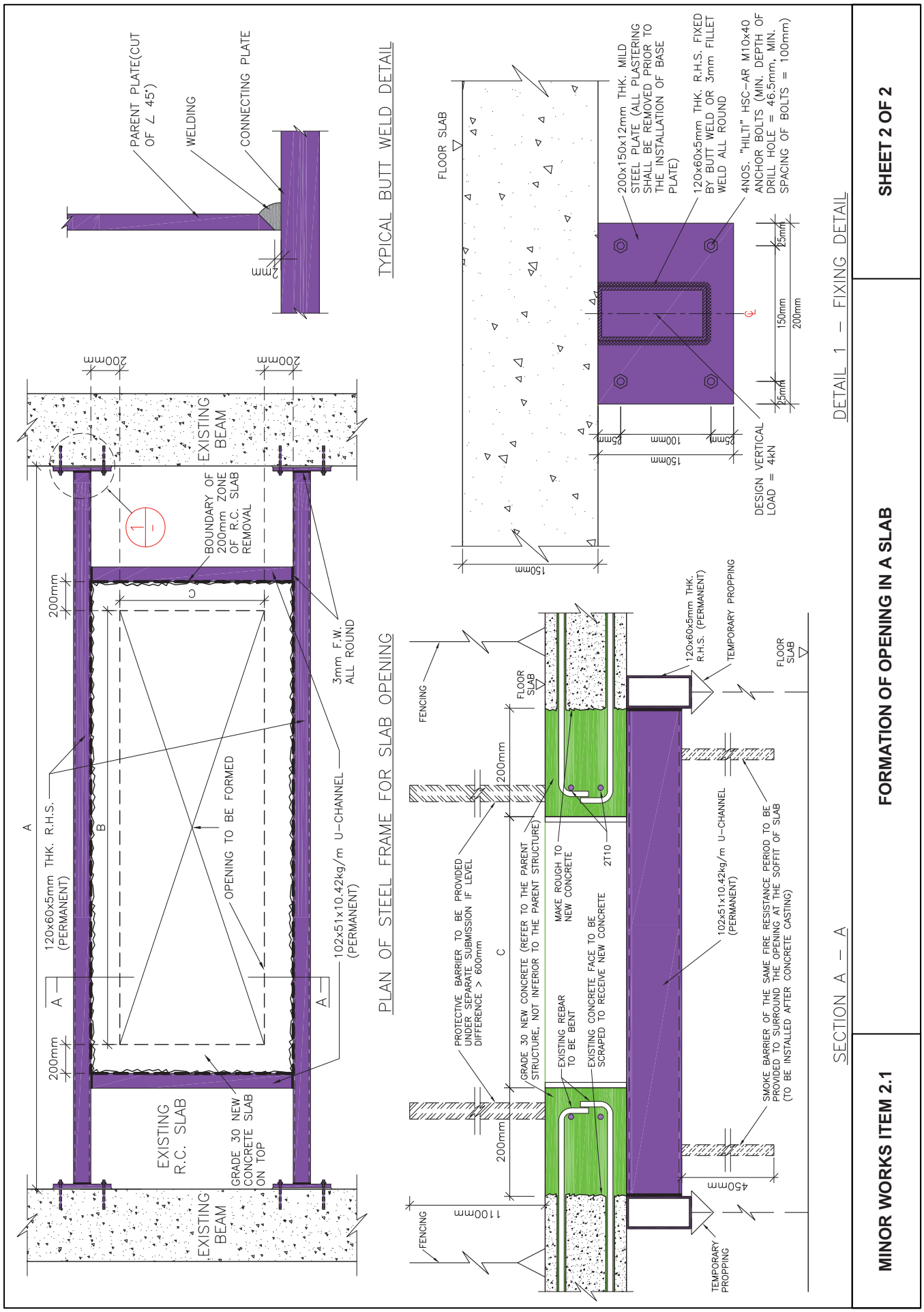
PARENT PLATE(CUT OF ∠ 45°)
WELDING
CONNECTING PLATE
12mm
TYPICAL BUTT WELD DETAIL
FLOOR SLAB
200x150x12mm THK. MILD STEEL PLATE (ALL PLASTERING SHALL BE REMOVED PRIOR TO THE INSTALLATION OF BASE PLATE)
120x60x5mm THK. R.H.S. FIXED BY BUTT WELD OR 3mm FILLET WELD ALL ROUND
4NOS. "HILTI" HSC–AR M10x40 ANCHOR BOLTS (MIN. DEPTH OF DRILL HOLE = 46.5mm, MIN. SPACING OF BOLTS = 100mm)
DESIGN VERTICAL LOAD = 4kN
150mm
100mm
25mm
150mm
200mm
DETAIL 1 – FIXING DETAIL
SHEET 2 OF 2
EXISTING BEAM
200mm
BOUNDARY OF 200mm ZONE OF R.C. SLAB REMOVAL
3mm F.W. ALL ROUND
120x60x5mm THK. R.H.S. (PERMANENT)
OPENING TO BE FORMED
102x51x10.42kg/m U–CHANNEL (PERMANENT)
EXISTING R.C. SLAB
GRADE 30 NEW CONCRETE SLAB ON TOP
PLAN OF STEEL FRAME FOR SLAB OPENING
FENCING
FLOOR SLAB
120x60x5mm THK. R.H.S. (PERMANENT)
TEMPORARY PROPPING
PROTECTIVE BARRIER TO BE PROVIDED UNDER SEPARATE SUBMISSION IF LEVEL DIFFERENCE > 600mm
GRADE 30 NEW CONCRETE (REFER TO THE PARENT STRUCTURE, NOT INFERIOR TO THE PARENT STRUCTURE)
MAKE ROUGH TO NEW CONCRETE
2T10
EXISTING REBAR TO BE BENT
EXISTING CONCRETE FACE TO BE SCRAPED TO RECEIVE NEW CONCRETE
102x51x10.42kg/m U–CHANNEL (PERMANENT)
SMOKE BARRIER OF THE SAME FIRE RESISTANCE PERIOD TO BE PROVIDED TO SURROUND THE OPENING AT THE SOFFIT OF SLAB (TO BE INSTALLED AFTER CONCRETE CASTING)
1100mm
450mm
SECTION A – A
FORMATION OF OPENING IN A SLAB
MINOR WORKS ITEM 2.1

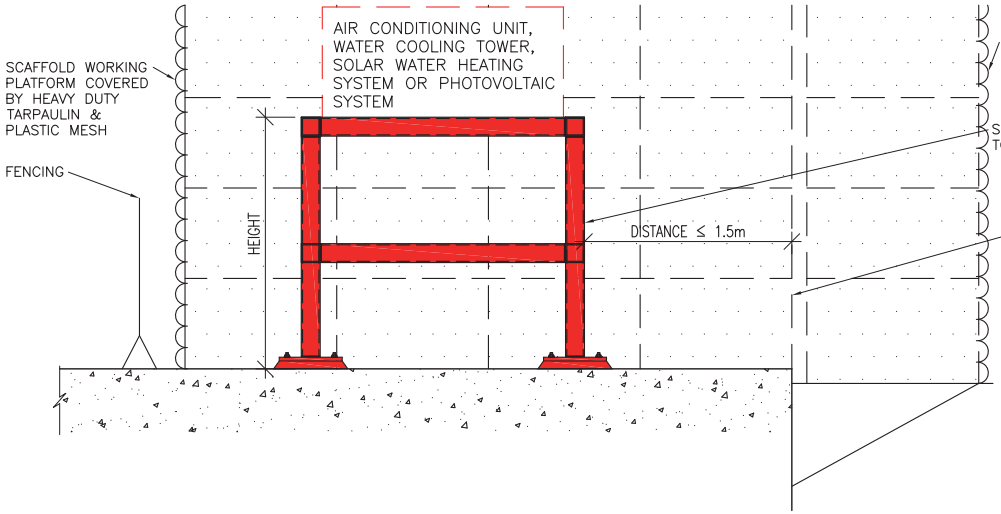

CASE 1: ON A SLAB
(OR A CANTILEVERED SLAB OF SPAN ≤ 1m)

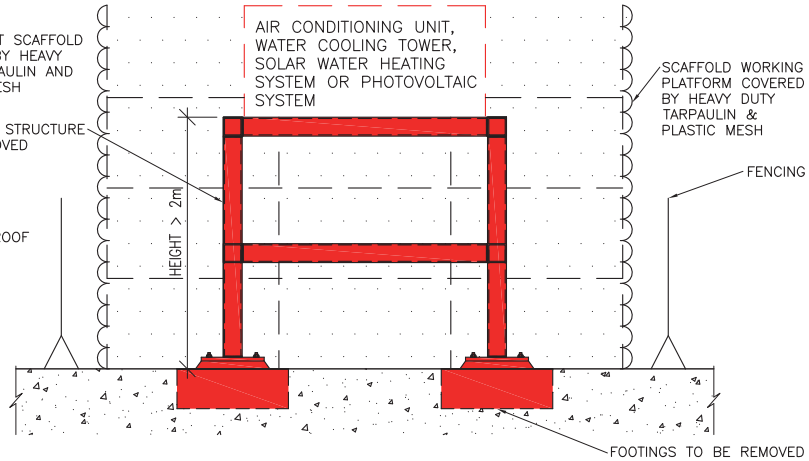

CASE 2: ON-GRADE

GENERAL NOTES :

1. The works carried out shall comply with the Buildings Ordinance and the provisions of other enactment. (Reference can be made to the examples listed in Sections 3 and 10 of the Guidelines.)

PREPARATION :

1. Obtain the existing design drawings/ information for reference.
2. Inform the utilities company or sector if the works to be involved.
3. Carry out condition survey of the parent structure/ existing condition prior to the commencement of works.
4. Obtain the original design of the approved structure for reference of any required reinstatement works.
5. Works procedures should be submitted to the Buildings Department prior to the commencement of works.

SAFETY AND PRECAUTIONARY MEASURES :

1. Fence-off the working area from the public.
2. No accumulation of demolished parts should be stored on roof.
3. Bamboo scaffolds details shall refer to the following figures as shown on drawing no. GN-1.
   - Figure 2 Truss-out bamboo scaffold
   - Figure 4 Working platform on a double-row bamboo scaffold

WORKING PROCEDURES :

A. For removal of supporting structure

1. Disconnect all air conditioning unit/plant prior to any removal works.
2. Dismantle the steel members of supporting structure by oxy-acetylene torch to small pieces.
3. Demolish the concrete plinth or concrete mass of supporting structure by hand-held hydraulic breaker.
4. Debris from removal works should be put into bags and retrieved into the main building access for construction waste disposal.
5. Make good and reinstate the affected areas (including the waterproofing) where necessary.
6. Remove the bamboo scaffold and clean the site.

B. For removal of footings (For on-grade situation):

1. Carry out excavation and backfilling work in accordance with minor works item 2.11.
2. Break down the concrete footings into small pieces for construction waste disposal.
3. Backfill and reinstate the top surface.

Remarks: This case excludes minor works item 3.2.

MINOR WORKS ITEM 2.2	REMOVAL OF SUPPORTING STRUCTURE FOR AN AIR CONDITIONING UNIT, WATER COOLING TOWER, SOLAR WATER HEATING SYSTEM OR PHOTOVOLTAIC SYSTEM

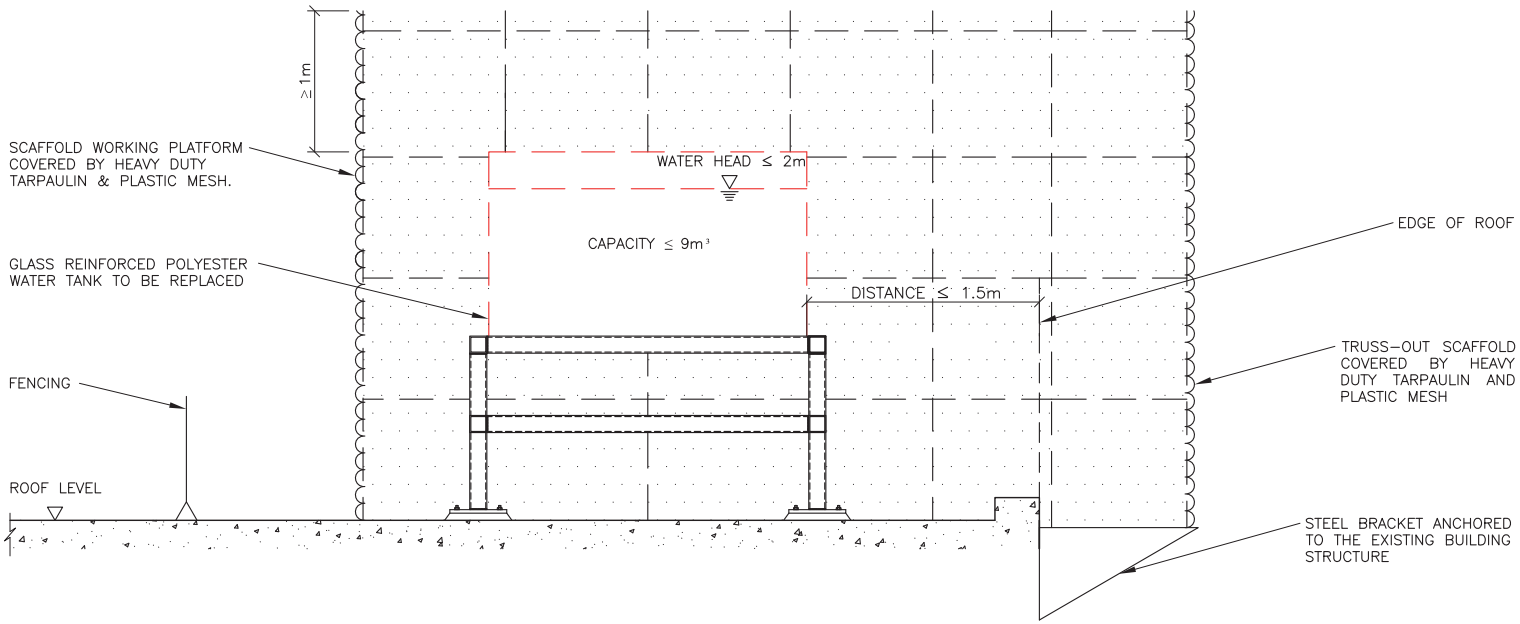

GENERAL NOTES :

1. The works carried out shall comply with the Buildings Ordinance and the provisions of other enactment. (Reference can be made to the examples listed in Sections 3 and 10 of the Guidelines.)

PREPARATION WORKS :

1. Obtain the original design drawings/ information for reference prior to the commencement of works.
2. Carry out condition survey of the parent structure/ existing condition prior to the commencement of works.
3. Fabrication and installation method should be strictly in accordance with the manufacturer's specification.
4. Replacement of the water tank should be in accordance with the original design.

SAFETY AND PRECAUTIONARY MEASURES :

1. Fence–off the working area from the public. Diversion arrangement shall be taken if necessary.
2. Bamboo scaffolds details shall refer to the following figures as shown on drawing no. GN–1.
   - Figure 2 Truss–out bamboo scaffold
   - Figure 4 Working platform on a double–row bamboo scaffold

WORKING PROCEDURES :

1. Disconnect all pipe works and cables connected to the water tank.
2. Remove the panels of the existing glass reinforced polyester water tank.
3. Reinstall the panels of the new glass reinforced polyester water tank in accordance with the original design.
4. Reconnect all pipe works and cables to the newly installed water tank.
5. Carry out test and commissioning to the newly installed water tank.
6. Remove scaffold and clean the site.

MINOR WORKS ITEM 2.3	REPLACEMENT OF GLASS REINFORCED POLYESTER WATER TANK LOCATED ON THE ROOF OF A BUILDING IN ACCORDANCE WITH THE ORIGINAL DESIGN

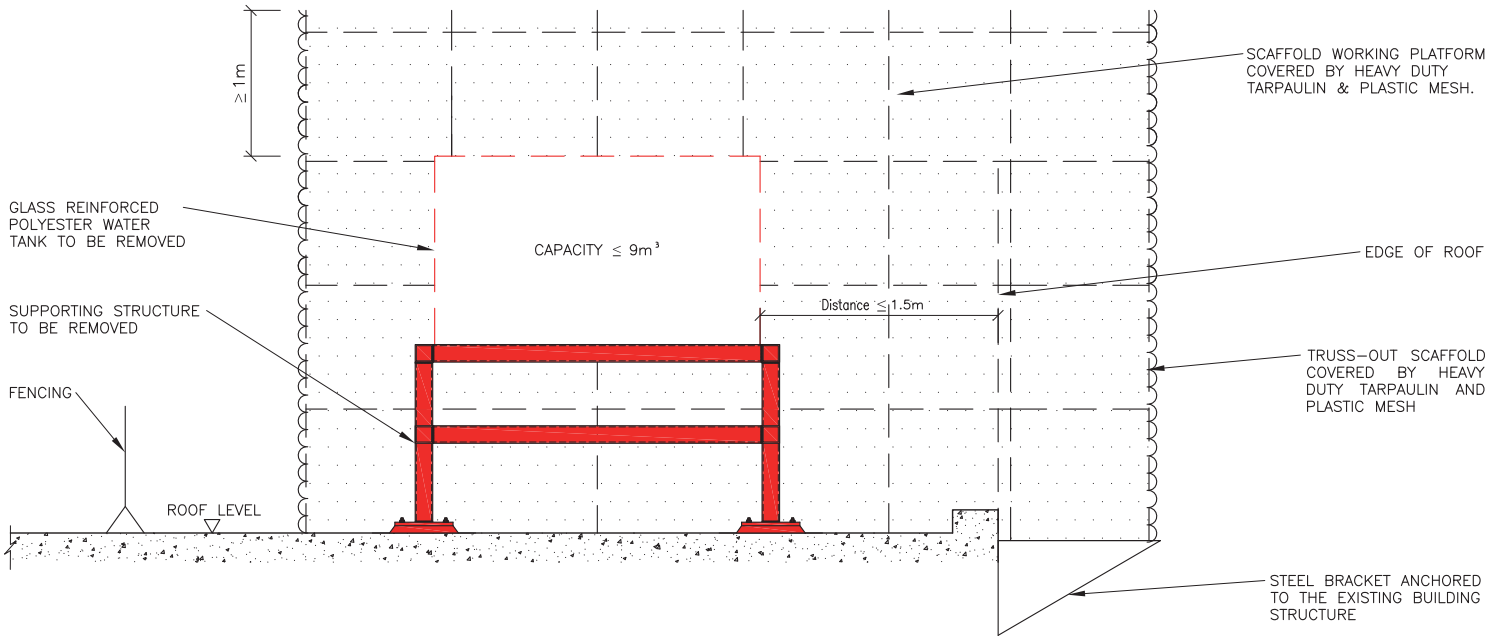

GENERAL NOTES :

The works carried out shall comply with the Buildings Ordinance and the provisions of other enactment. (Reference can be made to the examples listed in Sections 3 and 10 of the Guidelines.)

PREPARATION WORKS :

1. Obtain the existing design drawings / information for reference.
2. Carry out condition survey of the parent structure/ existing condition prior to the commencement of works.
3. Obtain the original design of the approved structure for any required reinstatement works.

SAFETY AND PRECAUTIONARY MEASURES :

1. Fence-off the working area from the public. Diversion arrangement shall be taken if necessary.
2. Bamboo scaffolds details shall refer to the following figures as shown on drawing no. GN-1.
   - Figure 2 Truss-out bamboo scaffold
   - Figure 4 Working platform on a double-row bamboo scaffold

WORKING PROCEDURES :

1. Remove the existing glass reinforced polyester water tank and any associated pipe work and cable if necessary. (Ensure all water pipes and electrical cable or wires have been disconnected prior to any removal works.)
2. Cut the supporting structure into manageable size by hand-held tools or machine and retrieve for construction waste disposal.
3. Make good and reinstate the affected areas (including waterproofing) where necessary.
4. Dismantle the bamboo scaffold and clean the site.

MINOR WORKS ITEM 2.4	REMOVAL OF GLASS REINFORCED POLYESTER WATER TANK LOCATED ON THE ROOF OF A BUILDING

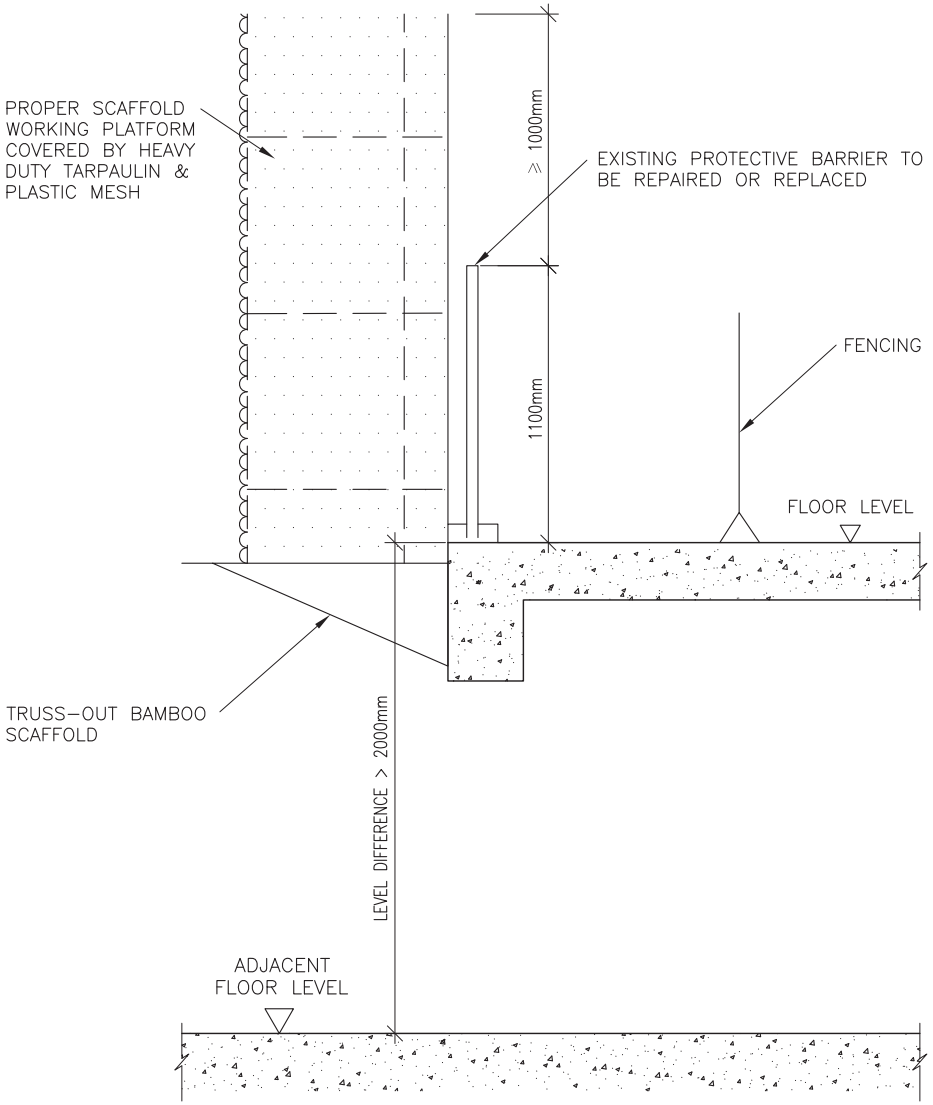

GENERAL NOTES :

The works carried out shall comply with the Buildings Ordinance and the provisions of other enactment. (Reference can be made to the examples listed in Sections 3 and 10 of the Guidelines.)

PREPARATION WORKS :

1. Obtain the original design drawings/ information for reference prior to the commencement of works
2. Carry condition survey of the parent structure/ existing condition prior to the commencement of works.

SAFETY AND PRECAUTIONARY MEASURES :

1. Fence–off the working area from the public. Diversion arrangement shall be taken if necessary.
2. Bamboo scaffolds details shall refer to the following figure as shown on drawing no. GN–1.
   - Figure 2 Truss–out bamboo scaffold

WORKING PROCEDURES :

A. Repair

1. Remove the defective member of the protective barrier and replace with a new one in accordance with the original design.
2. Make good and reinstate the affected areas of the parent structure.
3. Remove the bamboo scaffold and clean the site.
4. All rubbish generated shall be disposed as construction waste.

B. Replacement

1. Remove the protective barrier.
2. Reinstall the protective barrier in accordance with the original design.
3. Make good and reinstate the affected areas of the parent structure.
4. Remove the bamboo scaffold and clean the site.
5. All rubbish generated shall be disposed as construction waste.

MINOR WORKS ITEM 2.5	REPAIR OR REPLACEMENT OF PROTECTIVE BARRIER (OTHER THAN AN EXTERNAL REINFORCED CONCRETE WALL OR BLOCK WALL)

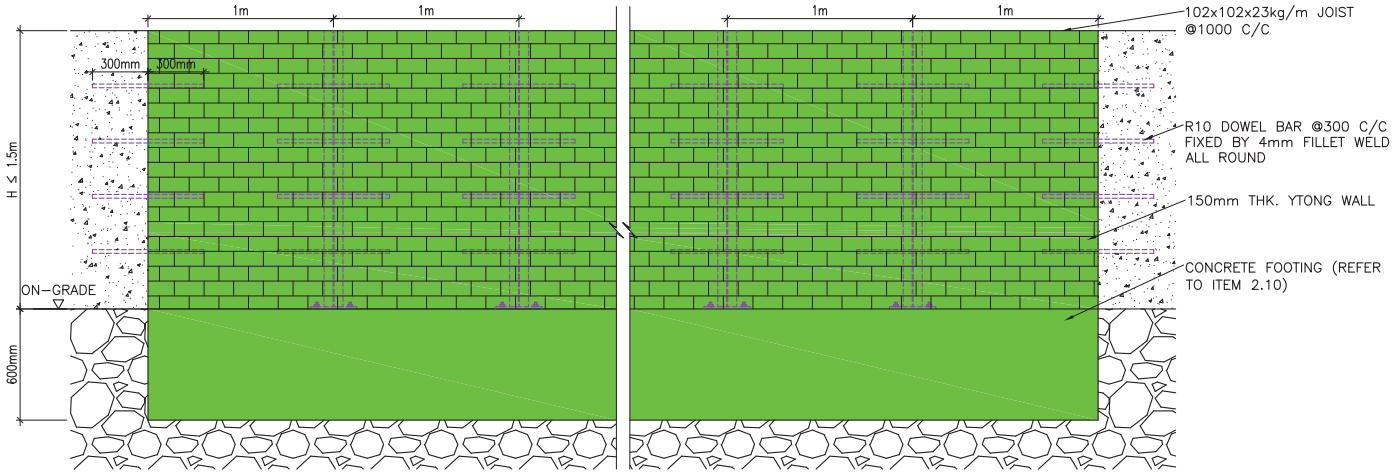

ERECTION OF SOLID FENCE WALL

GENERAL NOTES :

1. The works carried out shall comply with the Buildings Ordinance and the provisions of other enactment. (Reference can be made to the examples listed in Sections 3 and 10 of the Guidelines.)
2. All works shall comply with the following CoP/ standards:
   - Building (Construction) Regulations
   - Code of Practice on Wind Effects in Hong Kong 2004
   - Code of Practice for the Structural Use of Steel 2005
   - Code of Practice for the Structural Use of Concrete 2004
   - Code of Practice for Foundations
   - BS 5628: Part 1: 2005 Code of Practice for the Use of Masonry. Structural Use of Unreinforced Masonry
   - Specifications and Method Statements for YTONG AAC Block Wall
3. All structural steel to be grade S275 class 1 to BS EN 10025 and shall be hot dip galvanized to BS EN ISO 1461.
4. All connections to be 4 mm fillet weld all round with weld strength, p_w = 220 N/mm² to BS EN 1011 and all electrodes to BS EN ISO 2560.
5. All anchor bolts to be Hilti HSA–R M16 and shall be installed according to the manufacturer's specification.
6. All YTONG AAC blocks shall comply with BS6073–1 as solid block with the minimum compressive strength of 4 N/mm² and the density of 650 kg/m³.
7. Mortar designation shall be Class (ii) to Table 1 of BS5628–1 with the mean compressive strength at 28 days of 4.5 N/mm² by site tests.
8. All concrete works shall comply with CS1.
9. Existing concrete grade is assumed to be Grade 30 with 75 mm concrete cover.
10. Steel reinforcement shall comply with CS2:1995 and shall be bent in accordance with BS 4466
11. Minimum anchorage and lap length are 600mm unless otherwise specified.
12. Minimum allowable ground pressure to be 50 kN/m².

DESIGN LOADS :

1. Wind Load = 1.82kN/m² with force coeff. 2.0 (5m above site ground level)

PREPARATION WORKS :

1. Obtain the existing design drawings/ information for reference prior to the commencement of works.
2. Carry out condition survey of the parent structure/ existing condition prior to the commencement of works.
3. The structural adequacy of the supporting parent structure due to the additional installation of minor works must be checked to the satisfaction of structural requirement prior to the carrying out of minor works.

SAFETY AND PRECAUTIONARY MEASURES :

1. Fence–off the working area from the public. Diversion arrangement shall be taken if necessary.

WORKING PROCEDURES :

A. Erection
   1. Drill hole to the existing wall structure.
   2. Install dowel bar as per the drawing.
   3. Erect the block wall.
   4. Make good and reinstate the affected areas of the parent building and clean the site.

B. Alteration
   1. Break down the wall into small pieces for construction waste disposal.
   2. Replace the existing dowel bar by new dowel bar with same size.
   3. Alter the block wall.
   4. Make good and reinstate the affected areas of the parent building and clean the site.

Remarks :

1. For excavation works for the footings, please refer to minor works item 2.11.
2. For construction of spread footings, please refer to minor works item 2.10.

MINOR WORKS ITEM 2.6	ERECTION OR ALTERATION OF SOLID FENCE WALL	SHEET 1 OF 2

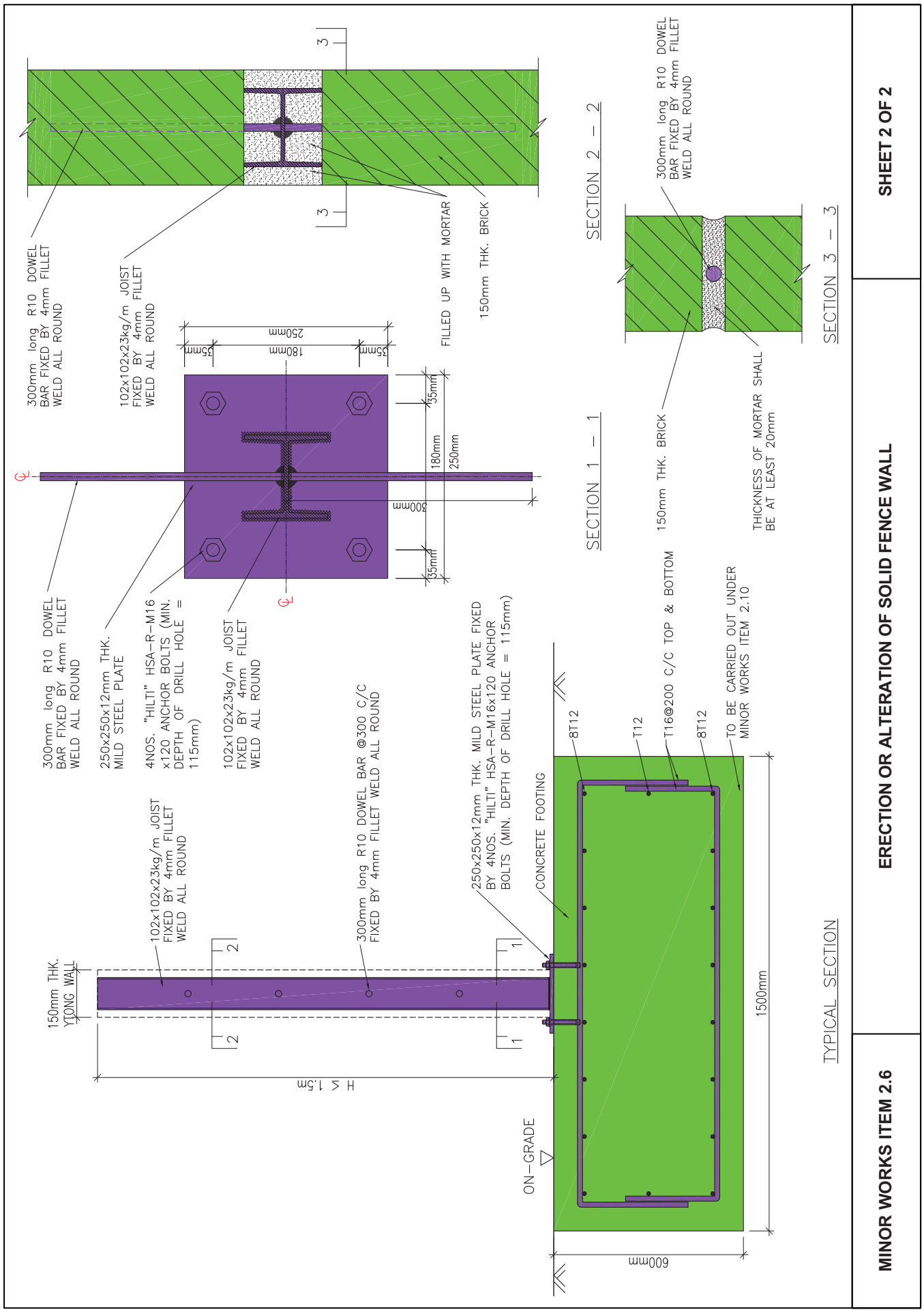
300mm long R10 DOWEL BAR FIXED BY 4mm FILLET WELD ALL ROUND
102x102x23kg/m JOIST FIXED BY 4mm FILLET WELD ALL ROUND
FILLED UP WITH MORTAR
150mm THK. BRICK
3
3
250mm
180mm
35mm
35mm
35mm
180mm
250mm
35mm
300mm
300mm long R10 DOWEL BAR FIXED BY 4mm FILLET WELD ALL ROUND
250x250x12mm THK. MILD STEEL PLATE
4NOS. "HILTI" HSA-R-M16 x120 ANCHOR BOLTS (MIN. DEPTH OF DRILL HOLE = 115mm)
102x102x23kg/m JOIST FIXED BY 4mm FILLET WELD ALL ROUND
SECTION 1 – 1
SECTION 2 – 2
300mm long R10 DOWEL BAR FIXED BY 4mm FILLET WELD ALL ROUND
150mm THK. BRICK
THICKNESS OF MORTAR SHALL BE AT LEAST 20mm
SECTION 3 – 3
150mm THK. YTONG WALL
102x102x23kg/m JOIST FIXED BY 4mm FILLET WELD ALL ROUND
300mm long R10 DOWEL BAR @300 C/C FIXED BY 4mm FILLET WELD ALL ROUND
250x250x12mm THK. MILD STEEL PLATE FIXED BY 4NOS. "HILTI" HSA-R-M16x120 ANCHOR BOLTS (MIN. DEPTH OF DRILL HOLE = 115mm)
CONCRETE FOOTING
8T12
T12
T16@200 C/C TOP & BOTTOM
8T12
TO BE CARRIED OUT UNDER MINOR WORKS ITEM 2.10
2
2
1
1
H ≤ 1.5m
ON-GRADE
1500mm
600mm
TYPICAL SECTION
SHEET 2 OF 2
ERECTION OR ALTERATION OF SOLID FENCE WALL
MINOR WORKS ITEM 2.6

2010/10

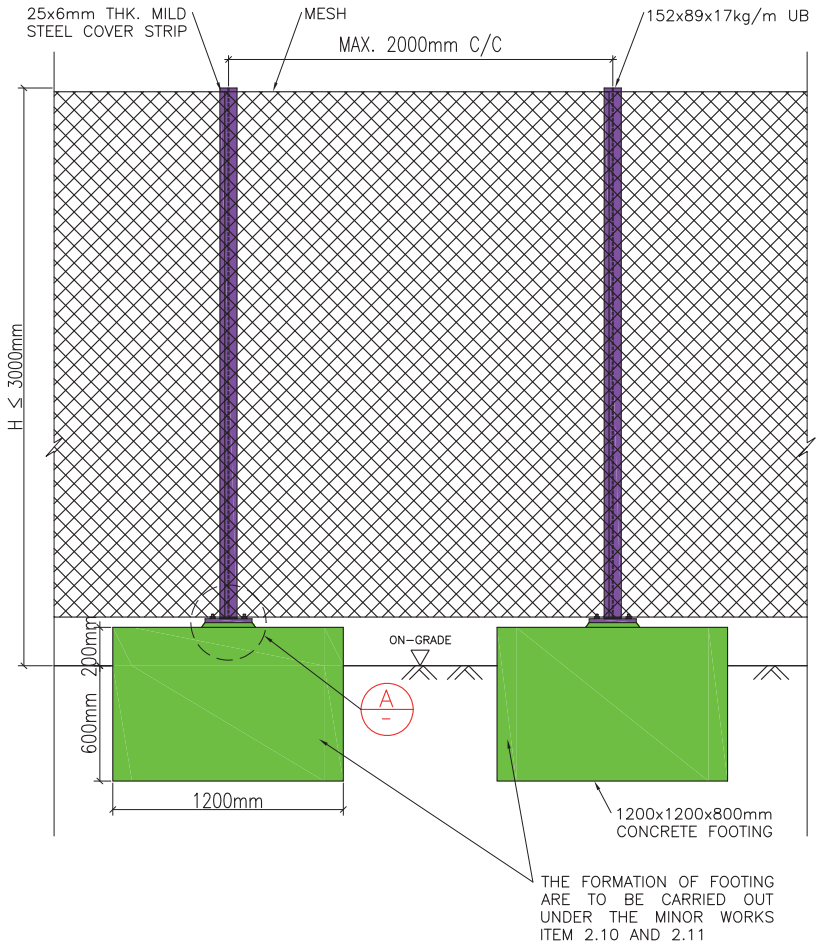

ERECTION OF EXTERNAL MESH FENCE

GENERAL NOTES :

1. The works carried out shall comply with the Buildings Ordinance and the provisions of other enactment. (Reference can be made to the examples listed in Sections 3 and 10 of the Guidelines.)
2. All works shall comply with the following CoP/ standards:
   Building (Construction) Regulations
   - Code of Practice on Wind Effects in Hong Kong 2004
   - Code of Practice for the Structural Use of Steel 2005
   - Code of Practice for the Structural Use of Concrete 2004
   - Code of Practice for Foundations
3. All structural steel to be grade S275 class 1 to BS EN 10025 and shall be hot dip galvanized to BS EN ISO 1461.
4. All connections to be 4 mm fillet weld all round or butt weld with weld strength, pw = 220 N/mm² to BS EN 1011 and all electrodes to BS EN ISO 2560.
5. All anchor bolts to be Hilti HIT–HY150 + HAS–R M16 and shall be installed according to the manufacturer's specification.
6. All concrete works shall comply with CS1.
7. Concrete grade and cover shall be grade 30 and 75 mm respectively.
8. Steel reinforcement shall comply with CS2:1995 and shall be bent in accordance with BS 4466.
9. Minimum anchorage and lap length are 600mm unless otherwise specified.
10. Minimum allowable ground pressure to be 50 kN/m².
11. Type of steel mesh to be No. 10 gauge 50mm mesh chain link.

DESIGN LOADS :

1. Dead Load = 0.5kN/m²
2. Wind Load = 1.82kN/m² with force coeff. of 1.85 and solidity ratio of 0.15

PREPARATION WORKS :

1. Obtain the existing design drawings/ information for reference prior to the commencement of works.
2. Carry out condition survey of the parent structure/ existing condition prior to the commencement of works.

SAFETY AND PRECAUTIONARY MEASURES :

1. Fence–off the working area from the public. Diversion arrangement shall be taken if necessary.

WORKING PROCEDURES :

A. Erection

   1. Formation of spread footing shall take reference on item 2.10.
   2. Drill holes to the footing structure for holding down bolts installation.
   3. Install holding down bolts and grout the drilled holes.
   4. Erect UB Post and fix line wire panel.
   5. Make good and reinstate any affected areas of the adjoining street works and clean the site.

B. Alteration

   1. Break down the UB Post into small pieces for construction waste disposal.
   2. Replace the existing bolts and wire panel by new bolts and panel with same size.
   3. Make good and reinstate the affected areas of the adjoining street works and clean the site.

Remarks : For excavation works & construction of spread footings, please refer to minor works items 2.11 & 2.10 respectively.

MINOR WORKS ITEM 2.7	ERECTION OR ALTERATION OF EXTERNAL MESH FENCE	SHEET 1 OF 2

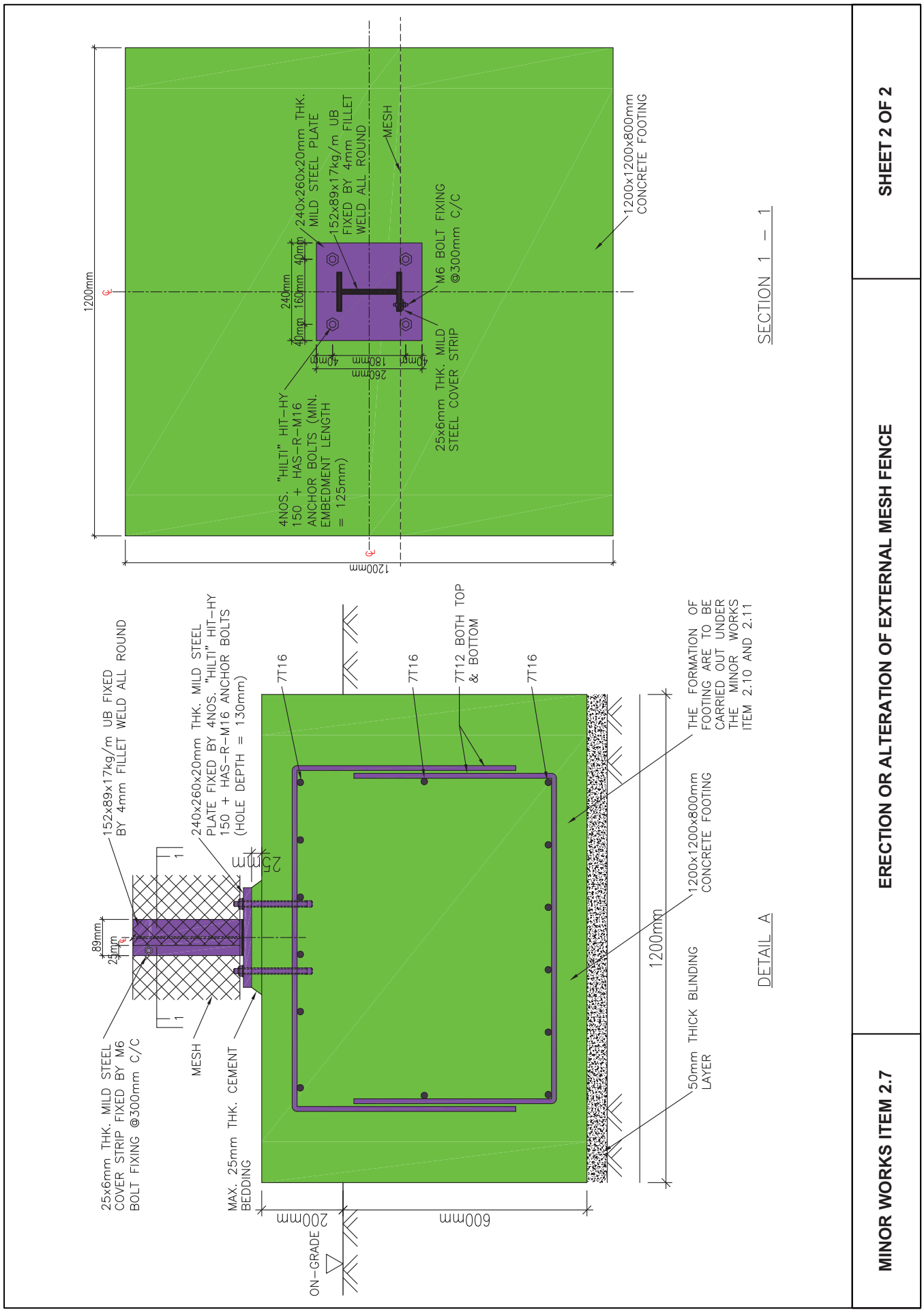
1200mm
240mm
40mm 160mm 40mm
240x260x20mm THK. MILD STEEL PLATE
152x89x17kg/m UB FIXED BY 4mm FILLET WELD ALL ROUND
MESH
M6 BOLT FIXING @300mm C/C
1200x1200x800mm CONCRETE FOOTING
4NOS. "HILTI" HIT-HY 150 + HAS-R-M16 ANCHOR BOLTS (MIN. EMBEDMENT LENGTH = 125mm)
25x6mm THK. MILD STEEL COVER STRIP
260mm
40mm 180mm 40mm
1200mm
SECTION 1 – 1
152x89x17kg/m UB FIXED BY 4mm FILLET WELD ALL ROUND
240x260x20mm THK. MILD STEEL PLATE FIXED BY 4NOS. "HILTI" HIT-HY 150 + HAS-R-M16 ANCHOR BOLTS (HOLE DEPTH = 130mm)
7T16
7T16
7T12 BOTH TOP & BOTTOM
7T16
THE FORMATION OF FOOTING ARE TO BE CARRIED OUT UNDER THE MINOR WORKS ITEM 2.10 AND 2.11
25mm
89mm
25mm
1200x1200x800mm CONCRETE FOOTING
1200mm
25x6mm THK. MILD STEEL COVER STRIP FIXED BY M6 BOLT FIXING @300mm C/C
MESH
MAX. 25mm THK. CEMENT BEDDING
50mm THICK BLINDING LAYER
200mm
600mm
ON-GRADE
DETAIL A
SHEET 2 OF 2
ERECTION OR ALTERATION OF EXTERNAL MESH FENCE
MINOR WORKS ITEM 2.7

2010/10

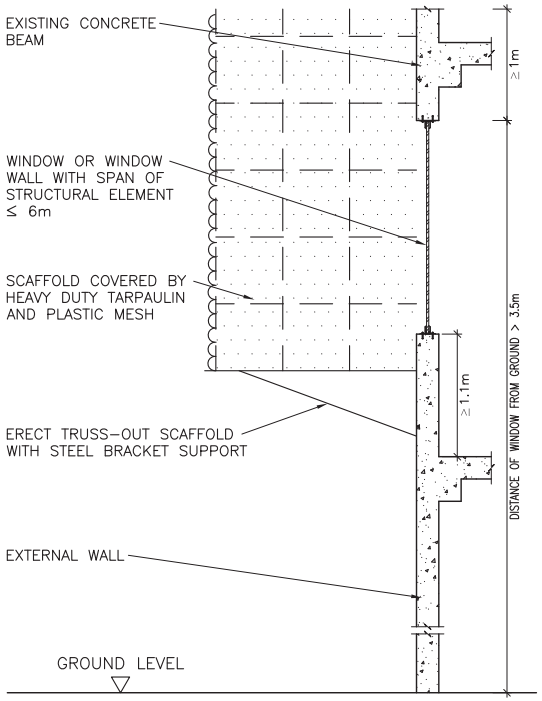

WINDOW OR WINDOW WALL

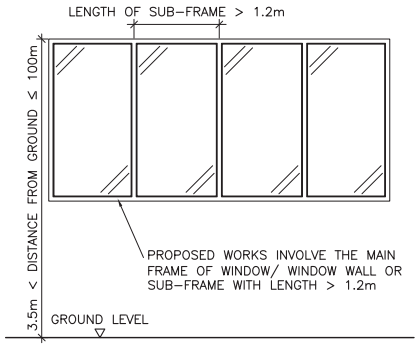

CONDITION DIAGRAM 1(3.5m < DISTANCE FROM GROUND ≤ 100m)

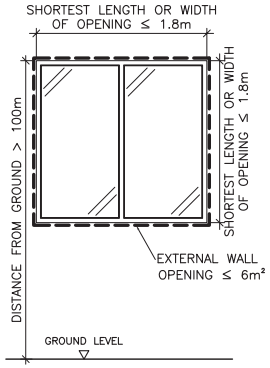

CONDITION DIAGRAM 2(DISTANCE FROM GROUND > 100m)

GENERAL NOTES :

1. The works carried out shall comply with the Buildings Ordinance and the provisions of other enactment. (Reference can be made to the examples listed in Sections 3 and 10 of the Guidelines.)
2. The requirements of PNAP APP-116 and PNRC 47 should be followed for the standards and details of aluminium windows and fixing of hinges.
3. All works shall comply with the following CoP/ standards:
   - Building (Construction) Regulations
   - Code of Practice on Wind Effects in Hong Kong 2004
   - Code of Practice for the Structural Use of Steel 2005
   - Code of Practice for the Structural Use of Concrete 2004
   - British Standard BS 6262 – Structural Use of Glass in Building
4. All structural steel plates and angles to be Grade S275 to BS EN 10029 and BS EN 10056 respectively. All steelworks shall be hot dip galvanized to BS EN ISO 1461.
5. All anchor bolts to be HILTI HSC-AR M10x40 @ 250 mm c/c and shall be installed according to the manufacturer's specifications.
6. All glass panels to be monolithic tempered glass with the allowable stress of 50 N/mm² to BS 6262.
7. Non-structural silicone sealant to be Dow Corning 791 or equivalent.
8. Structural silicone sealant to be Dow Corning 795 or equivalent. Maximum allowable design strength is 138 N/mm².
9. Existing concrete grade is assumed to be Grade 20 with the min. cube strength of 20N/mm².
10. The works do not result in any additional load to any cantilevered slab.
11. Size of glass should be 2mm smaller than the opening size to allow thermal expansion.
12. Proposed works do not involve the alteration of any other structural elements, except a simply supported beam that:
    (i) is not of pre-stressed construction; and
    (ii) is not used to support any column, flat slab or ribbed beam

PREPARATION WORKS :

1. Obtain the original design drawings/ information for reference prior to the commencement of works.
2. Inform the utilities company or sector if the works to be involved.
3. Carry out condition survey of the parent structure/ existing condition prior to the commencement of works.

DESIGN LOADS/ ASSUMPTION :

1. Dead Load = 27 kN/m³
2. Wind Load = 4.27 kN/m² with total pressure coeff. of 1.4 (150m above site ground level)
3. 19mm THK. tempered glass and its fixing is designed for glass span of 2.1m, spanning one-way.

SAFETY AND PRECAUTIONARY MEASURES

1. Fence-off the working area from the public. Diversion arrangement shall be taken if necessary.
2. Bamboo scaffolds details shall refer to the following figures as shown on drawing no. GN-1.
   - Figure 2 Truss-out bamboo scaffold
   - Figure 4 Working platform on a double-row bamboo scaffold

WORKING PROCEDURES :

A. Installation
   1. Setting out the level and alignment of the window frame onto the wall.
   2. Place the window frame into correct setting out.
   3. Fix the angle and neoprene pad in accordance with the original design.
   4. Seal up the gap between the edge of opening and window frames by using non-shrink cementitious grout.
   5. Make good and reinstate the affected areas of the parent building.
   6. Dismantle the bamboo scaffold and clean the site.

B. Alteration
   1. Temporary fix the window frame to a rigid point by using proper stainless steel wire/ nylon.
   2. Break off the concrete surrounding of the original window frame by hand-held hydraulic breaker. Allow 25mm to 75mm between the edge of opening and window frames.
   3. Cut off the original steel angle.
   4. Remove the original window glass and install the new window frames and glass according to the new design.
   5. Make good and reinstate the affected areas of the parent building.
   6. Dismantle the bamboo scaffold and clean the site.

C. Repair
   1. Temporary fix the window frame to a rigid point by using proper stainless steel wire/ nylon rope.
   2. Remove the defective window glass and using the same size of glass for replacement.
   3. Make good and reinstate the affected areas of the parent building.
   4. Dismantle the bamboo scaffold and clean the site.

Remarks: 1. For making opening on non-loadbearing external wall, please refer to minor works item 1.15, 2.13, 2.14 or 3.11 where appropriate.
2. For removal of existing window or window wall, please refer to minor works item 2.9.

MINOR WORKS ITEM 2.8	CONSTRUCTION, ALTERATION OR REPAIR OF WINDOW OR WINDOW WALL	SHEET 1 OF 2

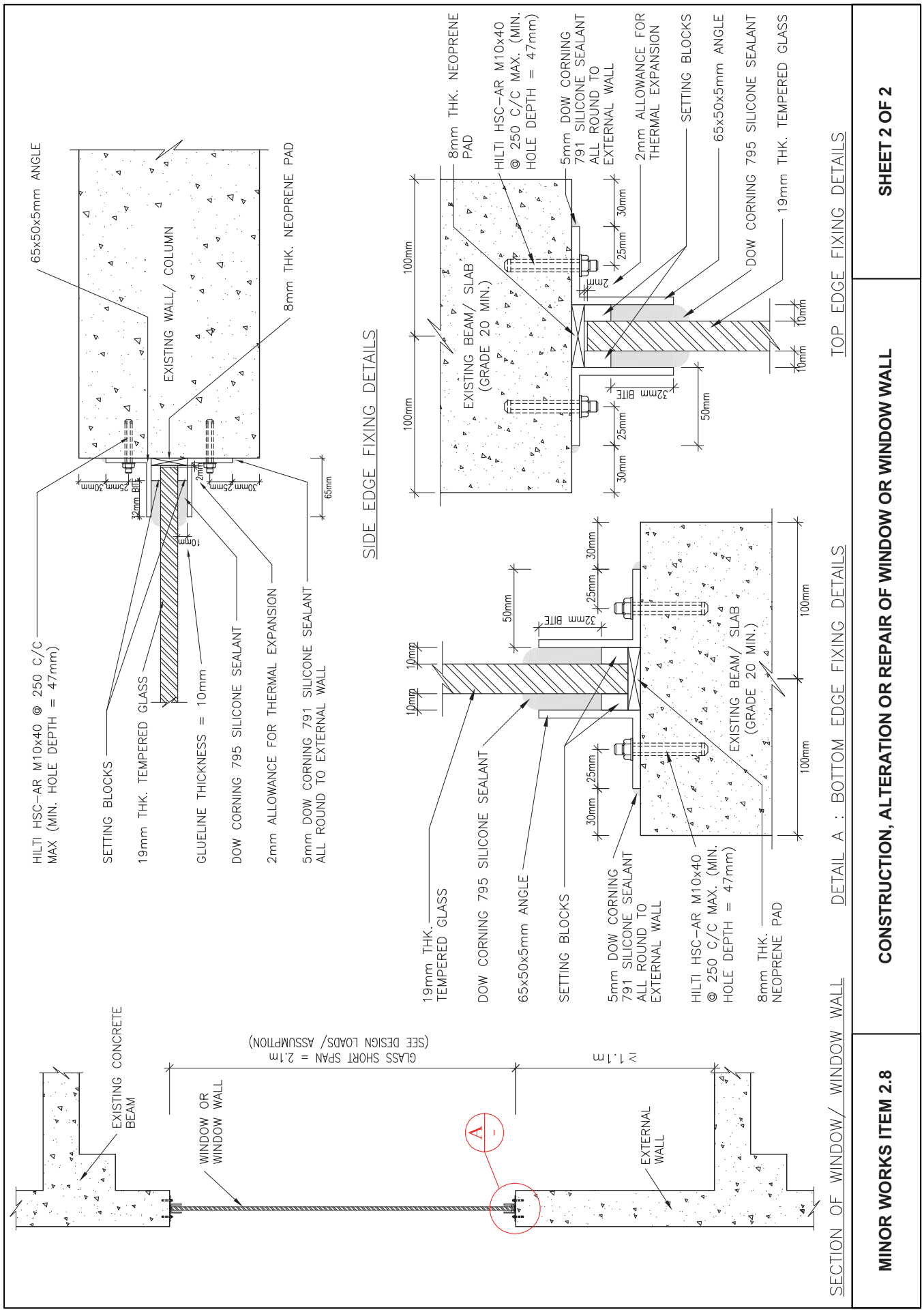
65x50x5mm ANGLE
EXISTING WALL/ COLUMN
8mm THK. NEOPRENE PAD
HILTI HSC-AR M10x40 @ 250 C/C MAX (MIN. HOLE DEPTH = 47mm)
SETTING BLOCKS
19mm THK. TEMPERED GLASS
GLUELINE THICKNESS = 10mm
DOW CORNING 795 SILICONE SEALANT
2mm ALLOWANCE FOR THERMAL EXPANSION
5mm DOW CORNING 791 SILICONE SEALANT ALL ROUND TO EXTERNAL WALL
SIDE EDGE FIXING DETAILS
EXISTING BEAM/ SLAB (GRADE 20 MIN.)
TOP EDGE FIXING DETAILS
DETAIL A : BOTTOM EDGE FIXING DETAILS
EXISTING CONCRETE BEAM
WINDOW OR WINDOW WALL
GLASS SHORT SPAN = 2.1m (SEE DESIGN LOADS/ ASSUMPTION)
≤ 1.1m
EXTERNAL WALL
SECTION OF WINDOW/ WINDOW WALL
SHEET 2 OF 2
CONSTRUCTION, ALTERATION OR REPAIR OF WINDOW OR WINDOW WALL
MINOR WORKS ITEM 2.8

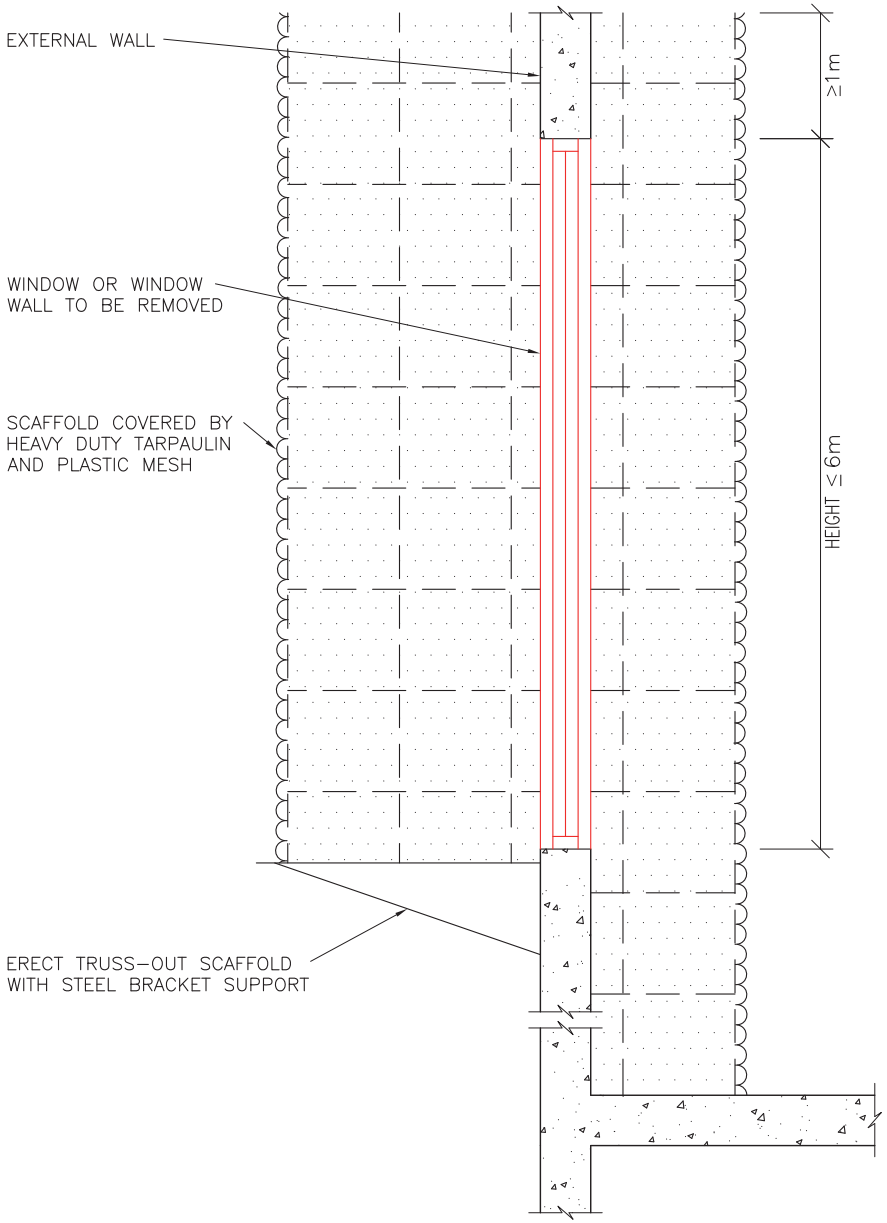

GENERAL NOTES :

The works carried out shall comply with the Buildings Ordinance and the provisions of other enactment. (Reference can be made to the examples listed in Sections 3 and 10 of the Guidelines.)

PREPARATION WORKS :

1. Obtain the existing design drawings/ information for reference.
2. Carry out condition survey of the parent structure/ existing condition prior to the commencement of works.

SAFETY AND PRECAUTIONARY MEASURES :

1. Fence-off the working area from the public. Diversion arrangement shall be taken if necessary.
2. Bamboo scaffolds details shall refer to the following figures as shown on drawing no. GN-1.
   - Figure 2 Truss-out bamboo scaffold
   - Figure 4 Working platform on a double-row bamboo scaffold

WORKING PROCEDURES :

1. Remove all glazing manually.
2. Remove all openable window frames manually by mechanical tool where appropriate.
3. Remove the main frame/ mullion/ transome using mechanical hand held tool.
4. All members shall be cut into small pieces for construction waste disposal.
5. Provide temporary protection to the wall opening for subsequent works where necessary
6. Dismantle bamboo scaffold and clean the site.

Remarks:

1. This case excludes minor works item 3.7.
2. For window erection to the opening, please refer to minor works item 2.8.
3. For non-load bearing block wall erection to the opening, please refer to minor works item 2.14 or 3.11 where appropriate.

MINOR WORKS ITEM 2.9	REMOVAL OF WINDOW OR WINDOW WALL

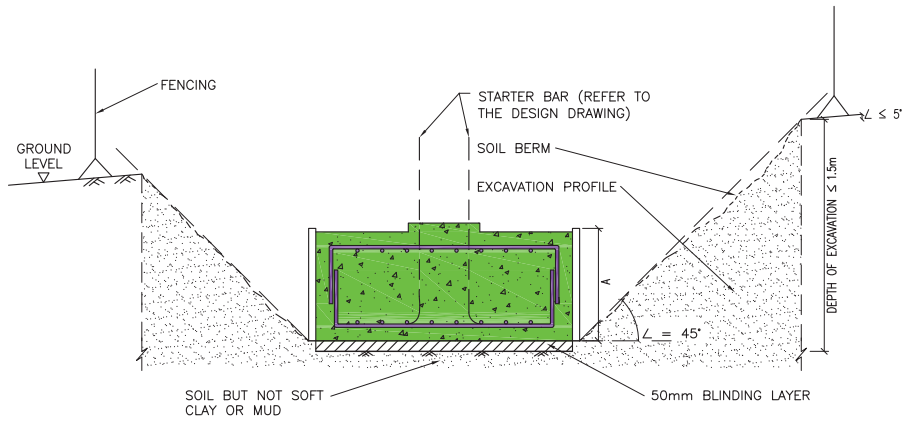

SECTION OF SPREAD FOOTING (OPEN CUT METHOD)

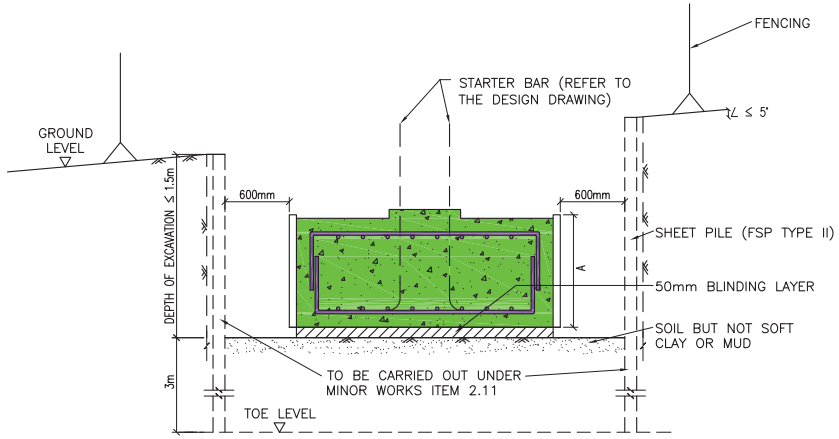

SECTION OF SPREAD FOOTING (SHEET PILE)

GENERAL NOTES :

1. The works carried out shall comply with the Buildings Ordinance and the provisions of other enactment. (Reference can be made to the examples listed in Sections 3 and 10 of the Guidelines.)
2. All works shall comply with the following CoP/ standards:
   - Building (Construction) Regulations
   - Code of Practice for the Structural Use of Concrete 2004
   - Code of Practice for the Structural Use of Steel 2005
   - Code of Practice for Foundations
   - Geoguide 1 : Guide to Retaining Wall Design, 2nd Edition
3. All structural steel to be grade S275.
4. All concrete works shall comply with CS1.
5. Existing concrete grade is assumed to be Grade 30 with 75mm concrete cover.
6. Steel reinforcement shall comply with CS2:1995 and shall be bent in accordance with BS 4466.
7. Minimum anchorage and lap length are 600mm unless otherwise specified.
8. Minimum allowable ground pressure to be 50 kN/m^2.

Design Dimensions :

A = 0.6m, B = 1.4m, C = 0.2m, maximum allowable vertical load = 72kN

Design Loads :

1. Surcharge = 5 kN/m^2

Design Soil Parameter :

$c = 0$ kPa, $\phi = 30°$, $K_a = 0.35$, $K_p = 3.00$

PREPARATION WORKS :

1. Obtain and investigate all underground utilities drawings/ information prior to the commencement of works.
2. Carry out condition survey of the parent structure/ existing condition prior commencement of works.
3. Obtain the original design of the approved structure for reference if any required reinstatement works.

SAFETY AND PRECAUTIONARY MEASURES :

1. Fence–off the working area from the public. Diversion arrangement shall be taken if necessary.
2. Shoring support is required if the depth of trench is more than 1.2m. Erection method shall be referred to "Guide to Trench Excavations" published by Utilities Technical Liaison Committee – Highways Department and Geotechnical Engineering Office – Civil Engineering Department (February 2003)
   A. The sizes of the structural members (e.g timber boards, struts and walings) and the spacings between struts depend on the actual excavation depth, ground conditions and other factors affecting the loading on the shoring system.
   B. Half timber board shoring may be adequate for moderately firm to firm soil provided that the groundwater level is below the bottom of the trench.

WORKING PROCEDURES :

1. For excavation shoring works, please refer to minor work item 2.11.
2. Laying blinding layer.
3. Erect formwork and fix reinforcing bar for the spread footing.
4. Concrete casting to the spread footing.
5. 24 hours after concrete casting, remove the formwork and carry out backfilling works.

REMARKS :

1. There is no slope steeper than 15 degrees within the hatched area.
2. There is no retaining wall or terrace wall higher than 1.5m, or below a line drawn down from the base of the footing that is 45 degrees to the horizontal, within the hatched area.
3. The allowable pressure imposed by the footing on the ground is not more than 100 kPa or (if the footing is located below the ground water level) 50 kPa.
4. The footing is not found on soft clay or mud.
5. The works do not involve excavation within the area number 1 or 3 of the scheduled areas.
6. For shoring details, please refer to minor works item 2.11.

MINOR WORKS ITEM 2.10	CONSTRUCTION OR ALTERATION OF SPREAD FOOTING ASSOCIATED WITH THE CARRYING OUT OF OTHER MINOR WORKS OR DESIGNED EXEMPTED WORKS	SHEET 1 OF 2

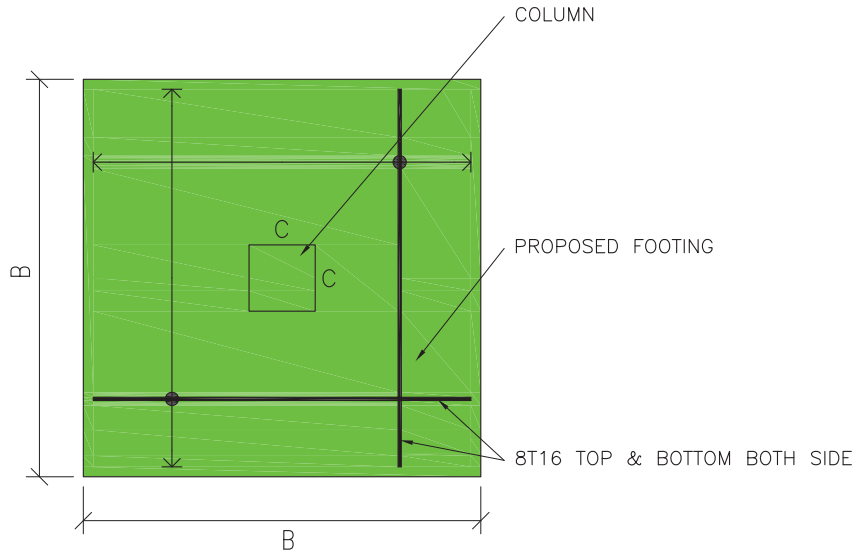

REINFORCEMENT DIAGRAM
FOR FOOTING

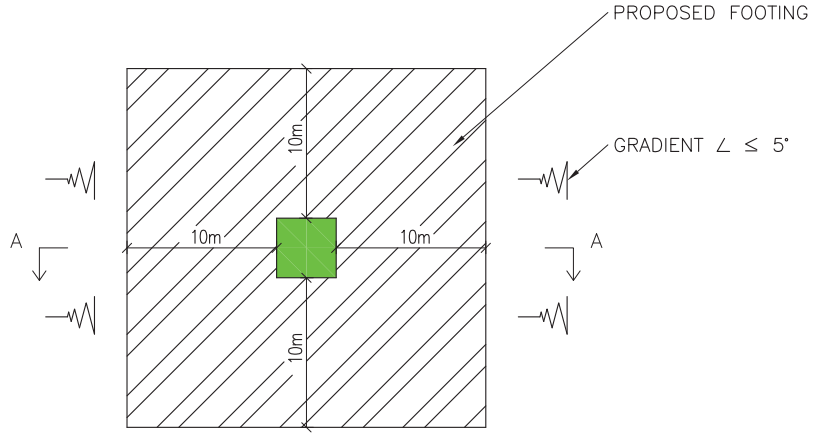

GENERAL GRADIENT OF THE AREA BOUNDED
BY LINES 10m AWAY FROM THE FOOTING

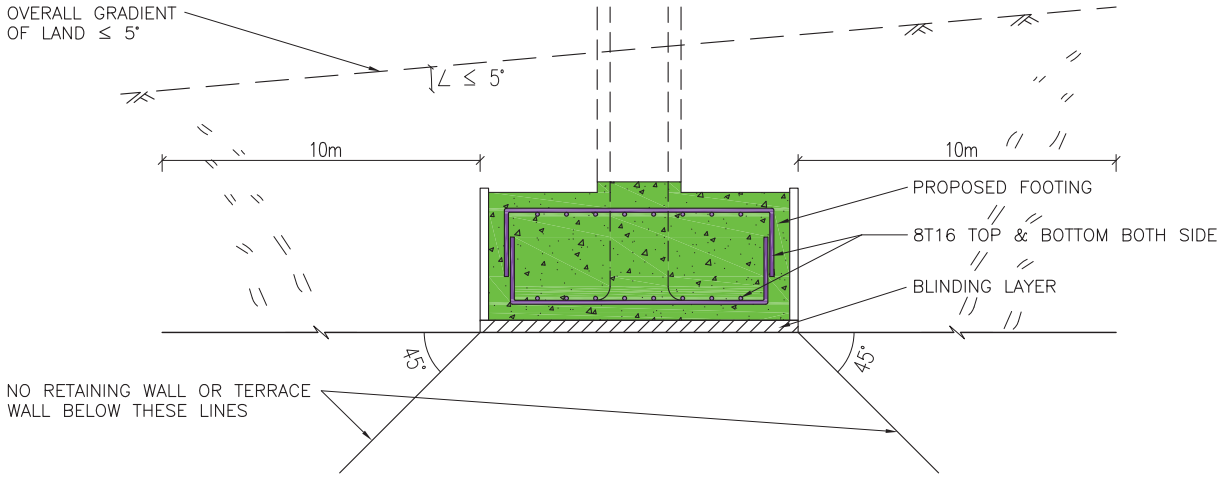

SECTION A–A

MINOR WORKS ITEM 2.10	**CONSTRUCTION OR ALTERATION OF SPREAD FOOTING ASSOCIATED WITH THE CARRYING OUT OF OTHER MINOR WORKS OR DESIGNED EXEMPTED WORKS**	**SHEET 2 OF 2**

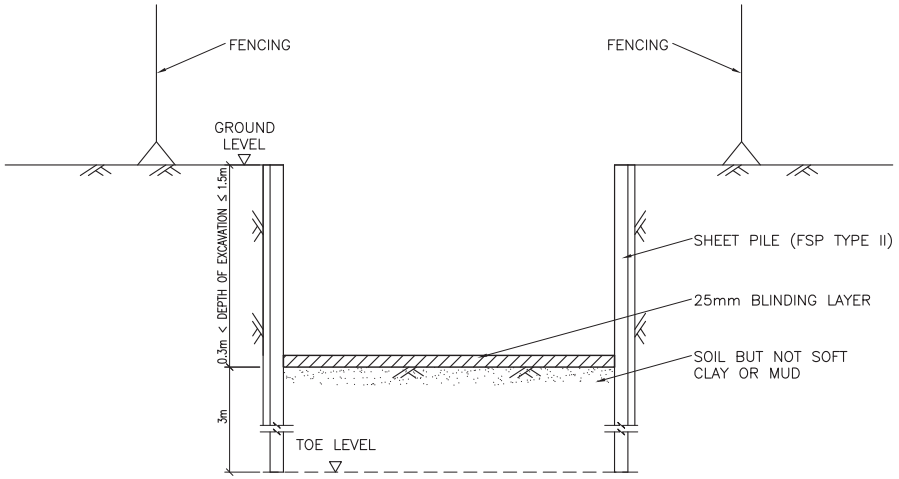

SHORING OPTION

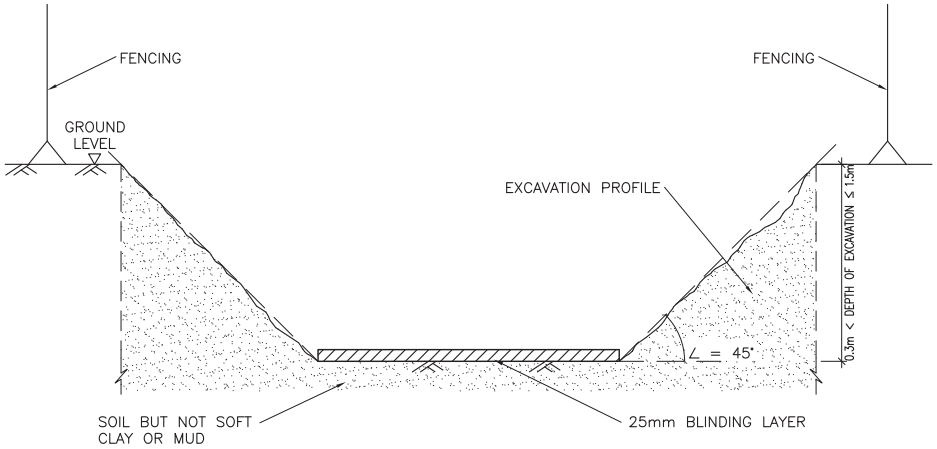

OPEN CUT OPTION (FOR DEPTH ≤ 1.5m)

GENERAL NOTES :

1. The works carried out shall comply with the Buildings Ordinance and the provisions of other enactment. (Reference can be made to the examples listed in Sections 3 and 10 of the Guidelines.)
2. All works shall comply with the following CoP/ standards:
   - Building (Construction) Regulations
   - Code of Practice for the Structural Use of Steel 2005
   - Geoguide 1 : Guide to Retaining Wall Design, 2nd Edition
3. All structural steel to be grade S275.
4. Minimum allowable ground pressure to be 50 kN/m².

Design Loads :

1. Surcharge = 5 kN/m²

Design Soil Parameter :

C = 0 kPa, ϕ = 30°, K_a = 0.35, K_p = 3.00

PREPARATION WORKS :

1. Obtain and investigate all underground utilities drawings/ information prior to the commencement of works.
2. Inform the underground utilities companies (if required) prior to the commencement of works.

SAFETY AND PRECAUTIONARY MEASURES :

1. Fence–off the working area from the public. Diversion arrangement shall be taken if necessary.
2. For trench excavation, reference shall be made to "Guide to Trench Excavations" published by Utilities Technical Liaison Committee – Highways Department and Geotechnical Engineering Office – Civil Engineering Department (February 2003)

WORKING PROCEDURES :

1. Excavate to the required depth.
2. Compact the soil base and lay plain concrete (25mm thick) as blinding layer.
3. Carry out the required work in the excavated trench (i.e. underground drain, footings and etc., please refer to the relevant minor works item for working procedures).
4. Carry out the backfilling works and reinstatement works to the top surface.

Remarks: The works are not carried out within area number 1 or 3 of the scheduled areas.

MINOR WORKS ITEM 2.11	EXCAVATION WORKS ASSOCIATED WITH THE CARRYING OUT OF OTHER MINOR WORKS OR DESIGNATED EXEMPTED WORKS

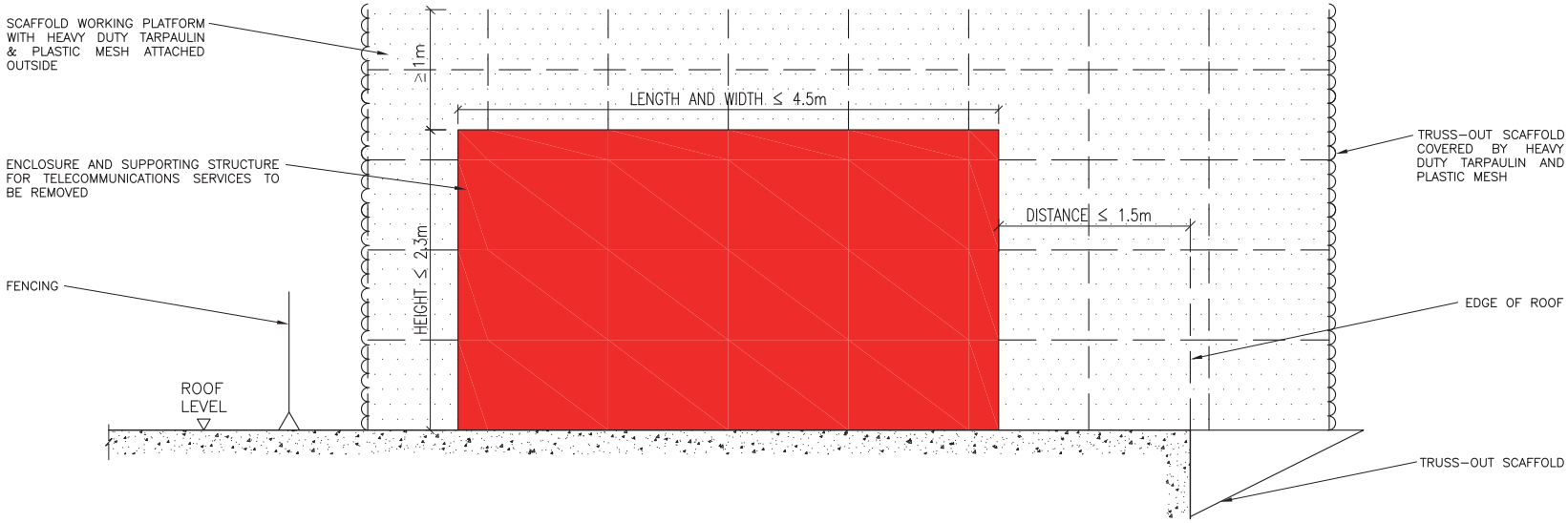

GENERAL NOTES :

The works carried out shall comply with the Buildings Ordinance and the provisions of other enactment. (Reference can be made to the examples listed in Sections 3 and 10 of the Guidelines.)

PREPARATION WORKS :

1. Obtain the existing design drawings/ information for reference prior to the commencement of works.
2. Carry out condition survey of the parent structure/ existing condition prior to the commencement of works.
3. Obtain the original design of the approved structure for reference of any required reinstatement works.

SAFETY AND PRECAUTIONARY MEASURES :

1. Fence-off the working area from the public. Diversion arrangement shall be taken if necessary.
2. Bamboo scaffolds details shall refer to the following figures as shown on drawing no. GN-1.
   - Figure 2 Truss-out bamboo scaffold
   - Figure 4 Working platform on a double-row bamboo scaffold

WORKING PROCEDURES :

1. Disconnect all utilities prior to the removal of enclosure or cabinet of the telecommunication services.
2. Remove the enclosure or cabinet of the telecommunication services by releasing all fixing bolts if necessary.
3. Remove the telecommunication equipment.
4. Demolish the structure using mechanical hand held tools to cut the members into small pieces for construction waste disposal.
5. After removal of the structure, make good and reinstate the affected areas (including waterproofing) of the parent building.
6. Remove the bamboo scaffold and clean the site.

Remarks: This case excludes minor works item 3.8.

MINOR WORKS ITEM 2.12	REMOVAL OF RADIO BASE STATION FOR TELECOMMUNICATIONS SERVICES IN THE FORM OF AN ENCLOSURE OR EQUIPMENT CABINET TOGETHER WITH ITS SUPPORTING STRUCTURE LOCATED ON A ROOF OF A BUILDING

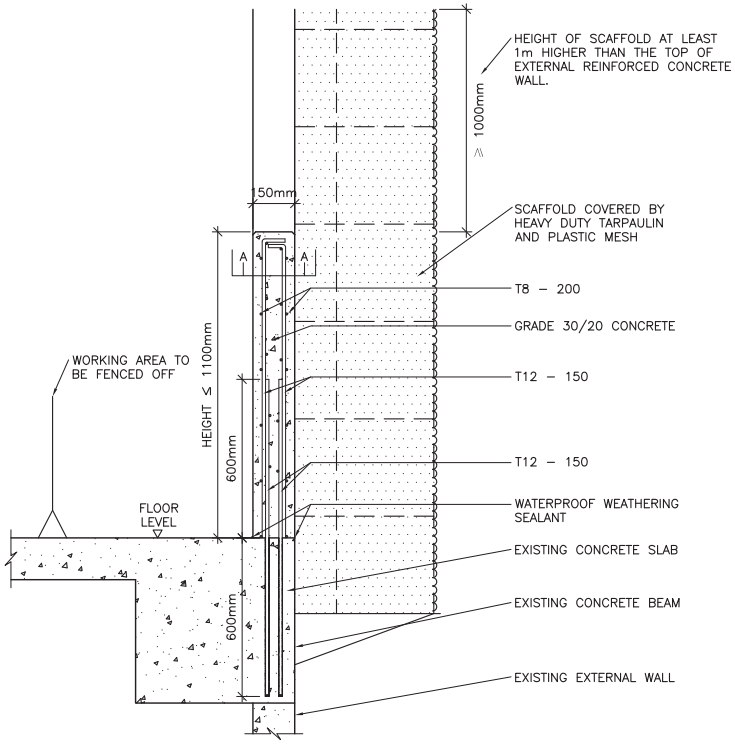

TYPICAL DETAIL OF 150 THK. RC WALL (HEIGHT ≤ 1100mm)

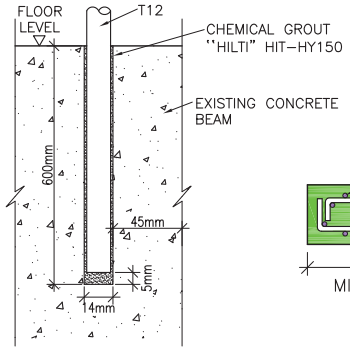

DETAIL OF DRILL HOLE

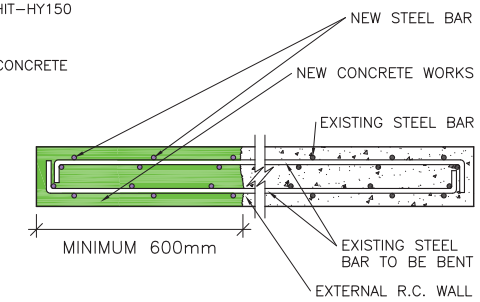

SECTION A–A (FOR ALTERATION)

GENERAL NOTES :

1. The works carried out shall comply with the Buildings Ordinance and the provisions of other enactment. (Reference can be made to the examples listed in Sections 3 and 10 of the Guidelines.)
2. All works shall comply with the following CoP/ standards:
   - Building (Construction) Regulations
   - Code of Practice for the Structural Use of Concrete 2004
   - Code of Practice on Wind Effects in Hong Kong 2004
3. All anchors bolt to be Hilti HIT–HY150 + T12 Rebar and shall be installed according to the manufacturer's specification.
4. All concrete works shall comply with CS1.
5. Existing concrete grade and minimum concrete cover to be Grade 30 and 40mm respectively.
6. Steel reinforcement shall comply with CS2:1995 with min, yield stress of 460 N/mm^2 and shall be bent in accordance with BS 4466.
7. All existing reinforcement for the parent members should not be damaged.
8. Minimum anchorage and lap length are 600mm unless otherwise specified.

DESIGN LOAD :

1. Wind Load = 5.72 kN/m^2 with force coefficient of 2.0 (100m above site ground level)

PREPARATION WORKS :

1. Obtain the existing design drawings/ information for reference prior to the commencement of works.
2. Carry out condition survey of the parent structure/ existing condition prior to the commencement of works.
3. The existing parent structure must be checked to the satisfaction of structural adequacy prior to installation of minor works item.

SAFETY AND PRECAUTIONARY MEASURES :

1. Fence–off the working area from the public. Diversion arrangement shall be taken if necessary.
2. Bamboo scaffolds details shall refer to the following figures as shown on drawing no. GN–1.
   - Figure 2 Truss–out bamboo scaffold
   - Figure 4 Working platform on a double–row bamboo scaffold

WORKING PROCEDURES :

A. Erection
   1. Erect formwork and fix reinforcing bar for the external reinforced concrete wall.
   2. Preparation of hole for anchoring rebar to follow strictly with the manufacturer's recommendation and instruction.
   3. Concrete casting to the external reinforced concrete wall.
   4. 24 hours after concrete casting, remove the formwork. Concrete curing until full strength is reached.
   5. Make good and reinstate the affected areas of the parent structure.
   6. Dismantle the bamboo scaffold and clean the site.

B. Alteration
   1. Saw cut and hack off finishes/ concrete at the area requiring alteration using mechanical hand held tools to expose the steel bars.
   2. Bend the existing steel bars and fix the new bars to form a new edge of the wall.
   3. Pour concrete after erect formwork and fix new reinforcing bar.
   4. 24 hours after concrete casting, remove the formwork. Concrete curing until full strength is reached.
   5. Make good and reinstate the affected areas of the parent structure.
   6. Dismantle the bamboo scaffold and clean the site.

C. Removal
   1. Break down the concrete top down into small pieces using mechanical hand held tools to expose the steel bars.
   2. Cut the exposed steel bars into manageable size for construction waste disposal.
   3. Repeat the above steps 1 and 2 until the complete removal of the reinforced concrete wall.
   4. Make good and reinstate the affected areas of the parent structure.
   5. Dismantle the bamboo scaffold and clean the site.

MINOR WORKS ITEM 2.13	ERECTION, ALTERATION OR REMOVAL OF EXTERNAL REINFORCED CONCRETE WALL (OTHER THAN A LOAD BEARING WALL) OF A BUILDING

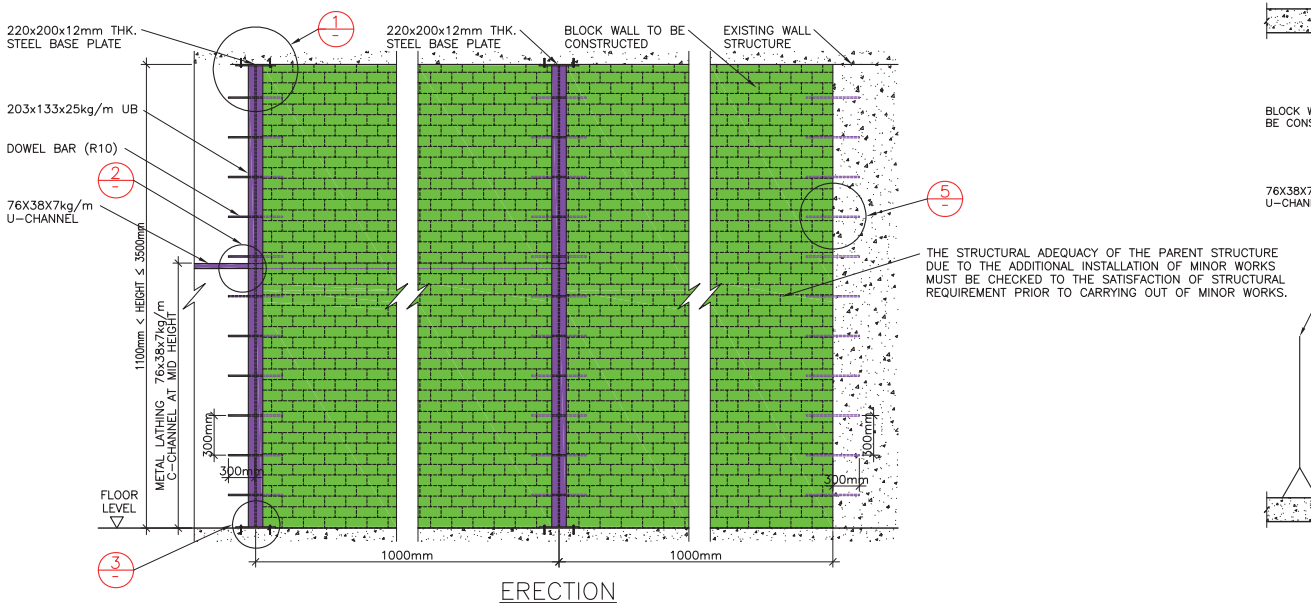

ERECTION

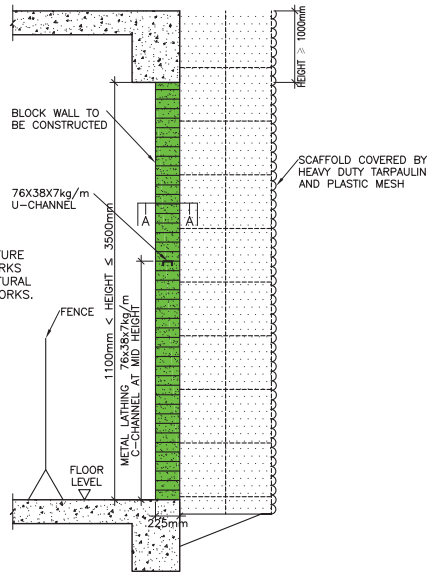

SECTION

GENERAL NOTES :

1. The works carried out shall comply with the Buildings Ordinance and the provisions of other enactment. (Reference can be made to the examples listed in Sections 3 and 10 of the Guidelines.)
2. All works shall comply with the following CoP/ standards:
   - Building (Construction) Regulations
   - Code of Practice on Wind Effects in Hong Kong 2004
   - Code of Practice for Structural Use of Steel 2005
   - BS 5628 Code of Practice for the Use of Masonry : Part 1 Structural Use of Unreiinforced Masonry
   - Code of Practice for Demolition of Buildings 2004
   - Specifications and Method Statements for YTONG AAC Block Wall
3. All structural steel to be grade S275 class 1 to BS EN 10025 and shall be hot dip galvanized to BS EN ISO 1461.
4. All connections to be 3 mm fillet weld all round or butt weld with weld strength, p_w = 220 N/mm² to BS EN 1011 and all electrodes to BS EN ISO 2560.
5. All anchor bolts to be Hilti HSC–AR M12x60 and shall be installed according to the manufacturer's specification.
6. All YTONG AAC blocks shall comply with BS6073–1 as solid block with the minimum compressive strength of 4 N/mm² and the density of 650 kg/m³.
7. Existing concrete grade is assumed to be Grade 20.
8. Mortar Designation shall be Class (ii) to Table 1 of BS5628–1 with the mean compressive strength at 28 days of 4.5 N/mm² by site tests.

DESIGN LOADS :

1. Live Load
   a. 0.75 kN/m applied at a height of 1.1m above F.G.L.
   b. 1.0 kN/m² applied between the floor to height of 1.1m above F.G.L.
   c. 0.5 kN applied on any part of between the floor to height of 1.1 above F.G.L.
2. Wind Load
   2.86 kN/m² with force coeff. 1.4 (100m above site ground level) whichever shall produce the more adverse effect.

PREPARATION WORKS :

1. Obtain the existing design drawings/ information of the signboard for reference.
2. Carry out condition survey of the parent structure/ existing condition prior to the commencement of works.
3. Obtain the original design of the approved structure for reference of any required reinstatement works.

SAFETY AND PRECAUTIONARY MEASURES :

1. Fence–off the working area from the public. Diversion arrangement shall be taken if necessary.
2. Bamboo scaffolds details shall refer to the following figure as shown on drawing no. GN–1.
   - Figure 2 Truss–out bamboo scaffold
   - Figure 4 Working platform on a double–row bamboo scaffold

WORKING PROCEDURES :

A. Erection
   1. Install the external block wall as per the drawing.
   2. Make good and reinstate the affected areas of the parent building.
   3. Dismantle the bamboo scaffold and clean the site.

B. Alteration (for exhaust fan installation at top opening size 300x300mm)
   1. Mark up the opening to be made for exhaust fan installation (right underneath beam).
   2. Saw cut the rendering/ plastering.
   3. Break out the brick work of the setting out area using hand held hammer.
   4. Make good of the edge of the opening and install the exhaust fan.
   5. Make good and reinstate the affected areas of the parent building.
   6. Dismantle the bamboo scaffold and clean the site.

C. Removal
   1. Remove the brickwork using mechanical hand–held tools from top to bottom.
   2. Remove the top 300mm wall layer first and repeat layer by layer.
   3. Cut down the steel posts into small pieces for construction waste disposal.
   4. Make good and reinstate the affected areas of the parent building.
   5. Dismantle the bamboo scaffold and clean the site.

MINOR WORKS ITEM 2.14	ERECTION, ALTERATION OR REMOVAL OF EXTERNAL BLOCK WALL (OTHER THAN A LOAD BEARING WALL) OF A BUILDING	SHEET 1 OF 2

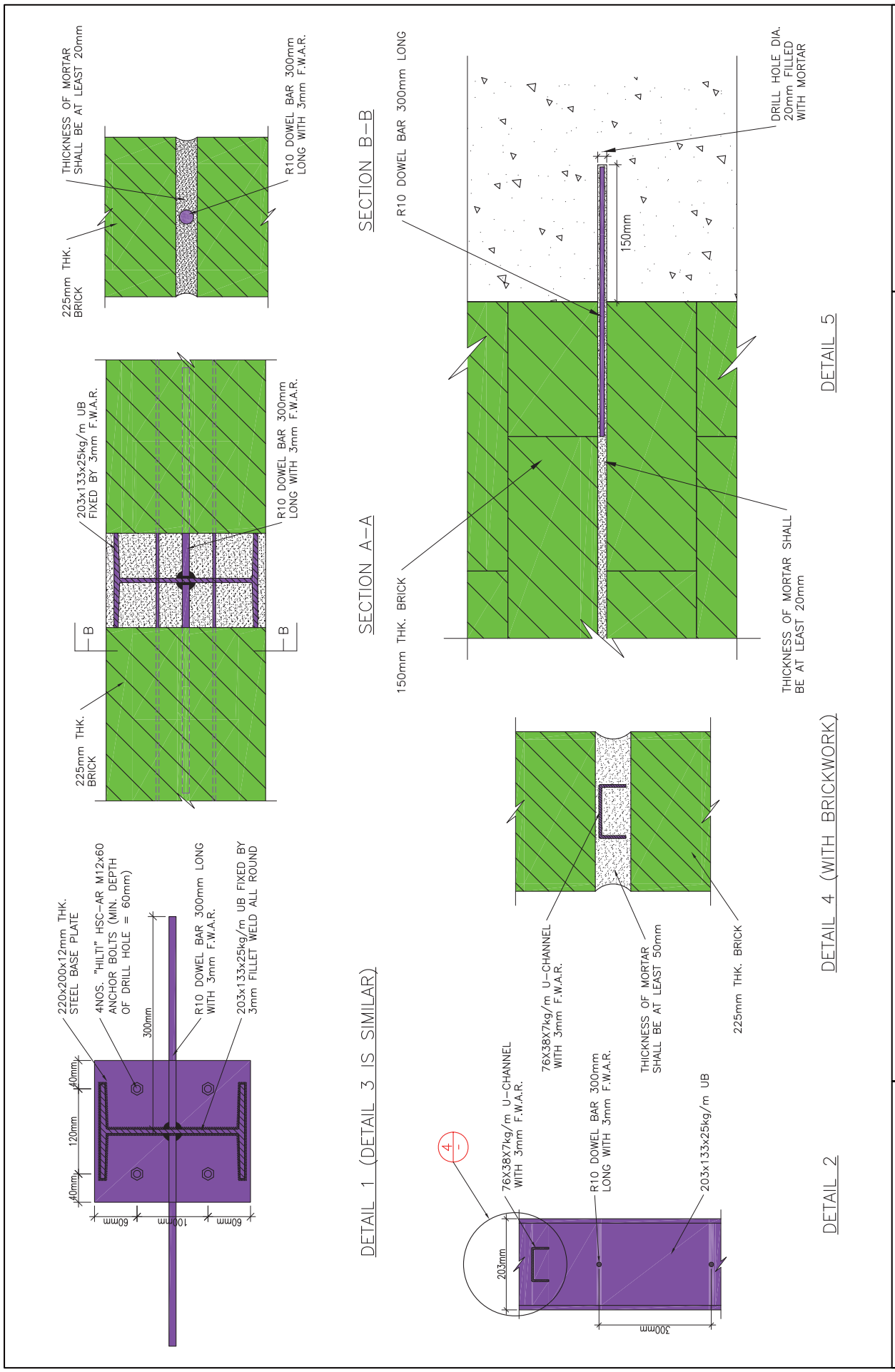
THICKNESS OF MORTAR SHALL BE AT LEAST 20mm
225mm THK. BRICK
R10 DOWEL BAR 300mm LONG WITH 3mm F.W.A.R.
SECTION B–B
203x133x25kg/m UB FIXED BY 3mm F.W.A.R.
R10 DOWEL BAR 300mm LONG WITH 3mm F.W.A.R.
B
B
225mm THK. BRICK
SECTION A–A
R10 DOWEL BAR 300mm LONG
DRILL HOLE DIA. 20mm FILLED WITH MORTAR
150mm
150mm THK. BRICK
THICKNESS OF MORTAR SHALL BE AT LEAST 20mm
DETAIL 5
220x200x12mm THK. STEEL BASE PLATE
4NOS. "HILTI" HSC–AR M12x60 ANCHOR BOLTS (MIN. DEPTH OF DRILL HOLE = 60mm)
300mm
R10 DOWEL BAR 300mm LONG WITH 3mm F.W.A.R.
203x133x25kg/m UB FIXED BY 3mm FILLET WELD ALL ROUND
40mm
120mm
40mm
60mm
100mm
60mm
DETAIL 1 (DETAIL 3 IS SIMILAR)
76X38X7kg/m U–CHANNEL WITH 3mm F.W.A.R.
76X38X7kg/m U–CHANNEL WITH 3mm F.W.A.R.
THICKNESS OF MORTAR SHALL BE AT LEAST 50mm
225mm THK. BRICK
DETAIL 4 (WITH BRICKWORK)
4
R10 DOWEL BAR 300mm LONG WITH 3mm F.W.A.R.
203x133x25kg/m UB
203mm
300mm
DETAIL 2
SHEET 2 OF 2
ERECTION, ALTERATION OR REMOVAL OF EXTERNAL BLOCK WALL (OTHER THAN A LOAD BEARING WALL) OF A BUILDING
MINOR WORKS ITEM 2.14

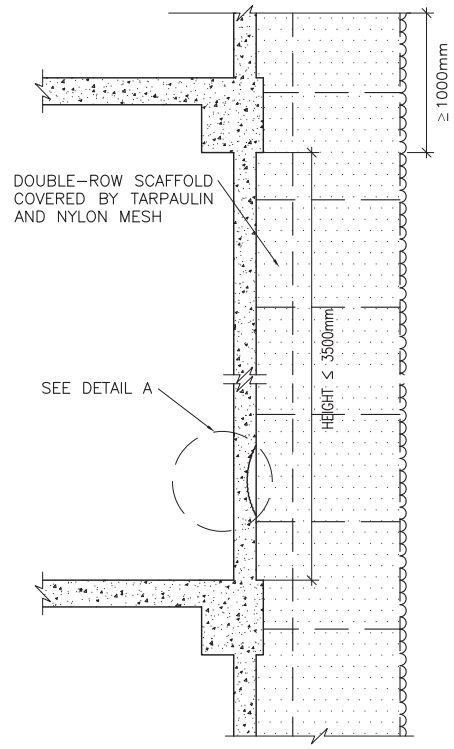

REPAIR OF EXTERNAL R.C. WALL

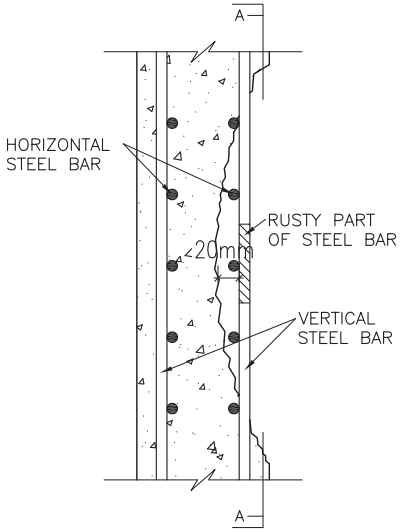

DETAIL A – REPAIRING OF DETERIORATED REBAR AT R.C. WALL

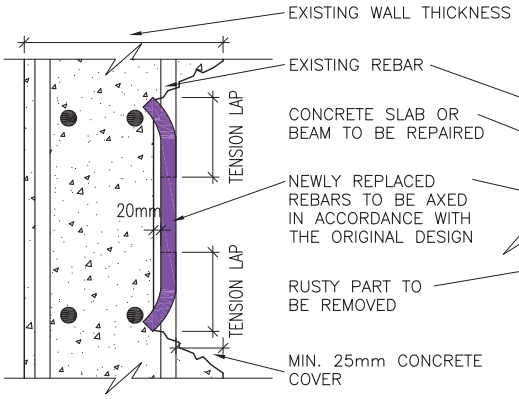

REPLACEMENT OF DETERIORATED REBAR AT R.C. WALL

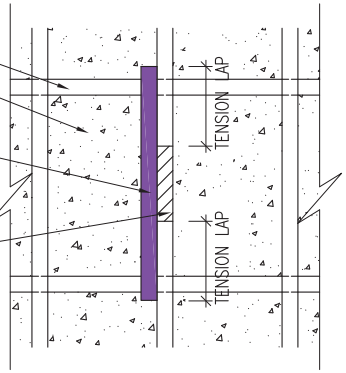

SECTION A–A

GENERAL NOTES :

1. The works carried out shall comply with the Buildings Ordinance and the provisions of other enactment. (Reference can be made to the examples listed in Sections 3 and 10 of the Guidelines.)
2. All works shall comply with the following CoP/ standards:
   - Building (Construction) Regulations
   - Code of Practice for the Structural Use of Concrete 2004
3. All concrete works shall comply with CS1.
4. Concrete grade and the minimum cover shall be grade 30 and 25 mm respectively.
5. Steel reinforcement to be high yield type II deformed bar with the characteristic strength of 460 N/mm^2 and comply with CS2:1995.
6. Minimum anchorage and lap length are 48 x diameter of the existing rebar unless otherwise specified.
7. Minimum FRP for the external wall to be repaired = 1 hr unless otherwise specified.

PREPARATION WORKS :

1. Obtain existing design drawings/ information for reference prior to the commencement of works. (To check the fire–resisting of the concrete wall and reinforced concrete details.)
2. Carry out condition survey of the parent structure/ existing condition prior to the commencement of works.

SAFETY AND PRECAUTIONARY MEASURES :

1. Fence–off the working area from the public. Diversion arrangement shall be taken if necessary.
2. Bamboo scaffolds details shall refer to the following figures as shown on drawing no. GN–1.
   - Figure 1 Double–row bamboo scaffold and working platform over pavement
   - Figure 4 Working platform on a double–row bamboo scaffold

WORKING PROCEDURES :

1. Hack off finishes/concrete at the repair area using hand held mechanical tools to expose the steel bar and sound concrete substrate.
2. Remove rust on the steel bar and apply primer to steel bar. If the corroded steel bar is found substantially less than its original size after derusting, replacement of the steel bar with the same size is required. The lap length for the existing/ new steel bar shall be dependent on the type of repair mortar adopted and shall be in accordance with the supplier's instructions.
3. Apply proprietary specialized repair mortar system according to supplier's instructions.
4. Apply procedure 1 to 3 to both vertical and horizontal rebars.
5. Make good and reinstate the affected areas of the parent building.
6. Remove the bamboo scaffold and clean the site.

MINOR WORKS ITEM 2.15	REPAIR OF EXTERNAL REINFORCED CONCRETE WALL (OTHER THAN A LOAD BEARING WALL) OF A BUILDING

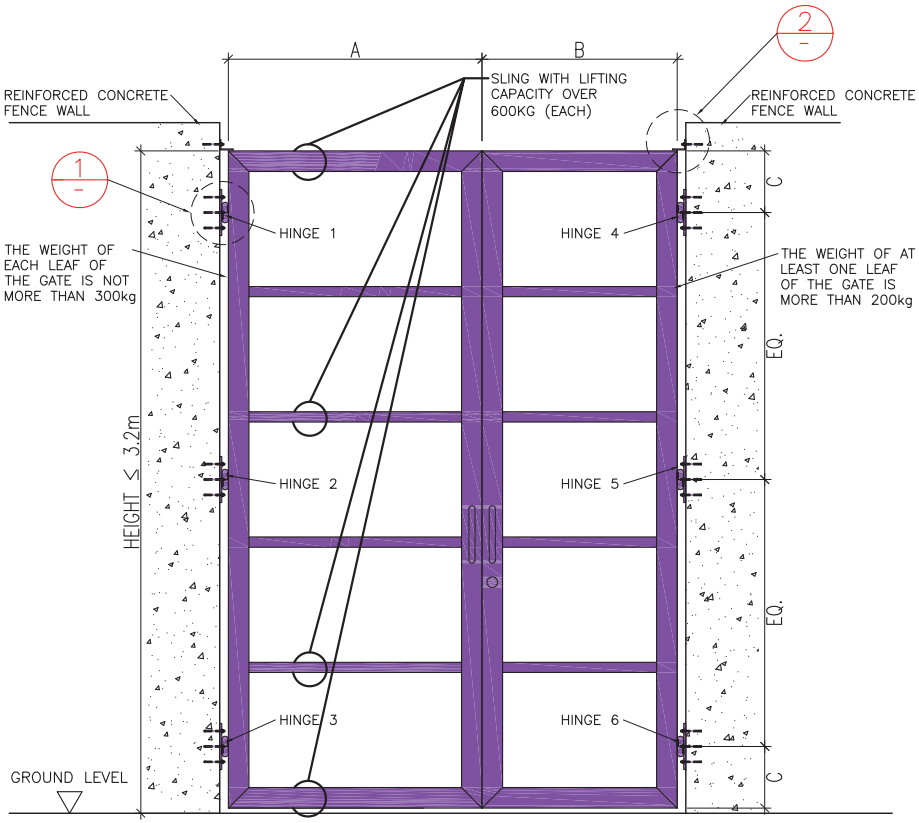

DESIGN FORCES (UNFACTORED)
(NOTATIONS AS SHOWN IN DIAGRAM BELOW)

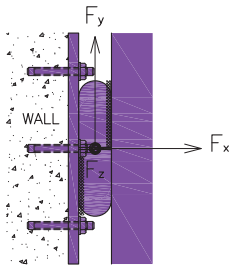

LEGEND :

Fx – Horizontal force parallel to wall
Fy – Vertical force parallel to wall
Fz – Horizontal force perpendicular to wall

Case 1 : Door Closed

Forces (kN)	Hinge no. 1	2	3
Fx	1.2	0	−1.2
Fy	−1.5	0	−1.5
Fz	+/−11.7	0	+/−11.7

(Hinges no. 4, 5 and 6 are similar. Users can conservatively adopted the same design forces as hinges no. 1, 2 and 3 respectively)

Case 2 : Door Opened (90 degree to the wall)

Forces (kN)	Hinge no. 1	2	3
Fx	+/−11.7	0	+/−11.7
Fy	−1.5	0	−1.5
Fz	1.2	0	−1.2

(Hinges no. 4, 5 and 6 are similar. Users can conservatively adopted the same design forces as hinges no. 1, 2 and 3 respectively)

ERECTION OF METAL GATE AT A FENCE WALL OR AT AN ENTRANCE TO A BUILDING

GENERAL NOTES :

1. The works carried out shall comply with the Buildings Ordinance and the provisions of other enactment. (Reference can be made to the examples listed in Sections 3 and 10 of the Guidelines.)
2. All works shall comply with the following CoP/ standards:
   - Building (Construction) Regulations
   - Code of Practice on Wind Effects in Hong Kong 2004
   - Code of Practice for the Structural Use of Steel 2005
   - Code of Practice for the Structural Use of Concrete 2004
3. All structural steel to be grade S275 class 1 to BS EN 10025 and shall be hot dip galvanized to BS EN ISO 1461.
4. All connections to be 5 mm fillet weld all round with weld strength, pw = 220 N/mm² to BS EN 1011 and all electrodes to BS EN ISO 2560.
5. All anchor bolts to be Hilti HSC–AR M10x40 and shall be installed according to the manufacturer's specification.
6. Concrete grade of the existing reinforced concrete wall shall be Grade 30 with a minimum thickness of 200mm.

DESIGN DIMENSIONS :

A = 2m, B = 1.2m, C = 300mm

DESIGN LOADS :

1. Dead Load = 300kg/Leaf
2. Wind Load = 1.82kN/m² with force coeff. 2.0 (5m above site ground level)

PREPARATION WORKS :

1. Obtain the existing design drawings/ information for reference prior to the commencement of works.
2. Carry out condition survey of the parent structure/ existing condition to ensure it is structurally capable to hold the metal gate prior to the commencement of works.
3. Disconnect the electric locking device (if any) prior to the commencement of works.

SAFETY AND PRECAUTIONARY MEASURES :

1. Fence–off the working area from the public. Diversion arrangement shall be taken if necessary.
2. The use of lifting device shall be in accordance with relevant Code of Practice/ Guidance Notes issued by the Labour Department.

WORKING PROCEDURES :

A. Erection

1. Install the metal gate as per the drawing.
2. Check the gate to ensure if it can operate smoothly.
3. Make good and reinstate the affected areas of the parent structure and clean the site.

B. Alteration or Repair

1. Fix the lifting device(s) onto a secure point above the metal gate.
2. Temporary remove the metal gate by using lifting device(s).
3. Alter or repair the member(s) of the metal gate.
4. Erect the metal gate by the lifting device(s).
5. Make good and reinstate the affected areas of the parent structure and clean the site.

MINOR WORKS ITEM 2.16	ERECTION, ALTERATION OR REPAIR OF METAL GATE AT A FENCE WALL OR AT AN ENTRANCE TO A BUILDING	SHEET 1 OF 2

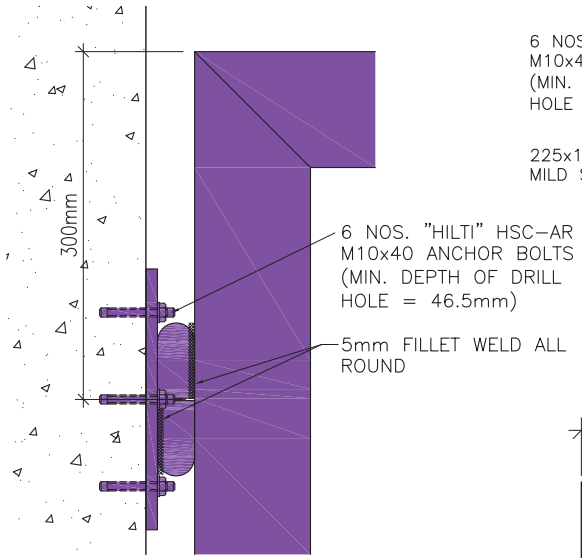

DETAIL 1

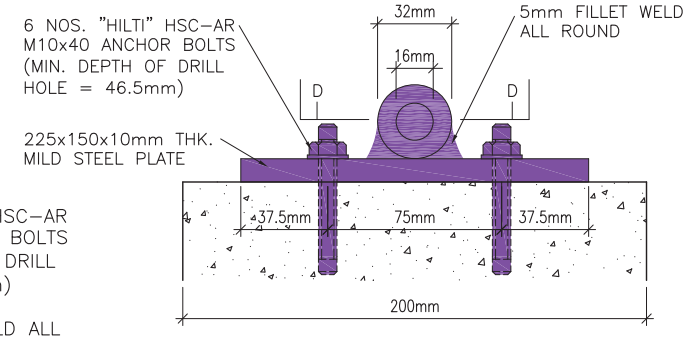

SECTION A–A

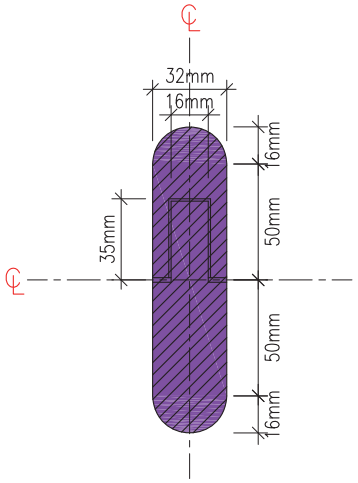

SECTION D – D

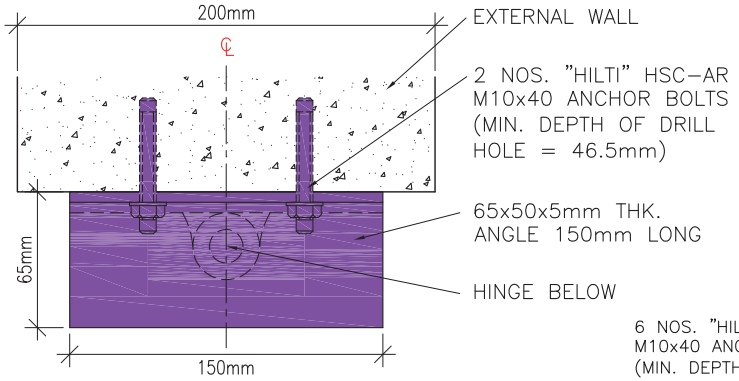

SECTION B–B

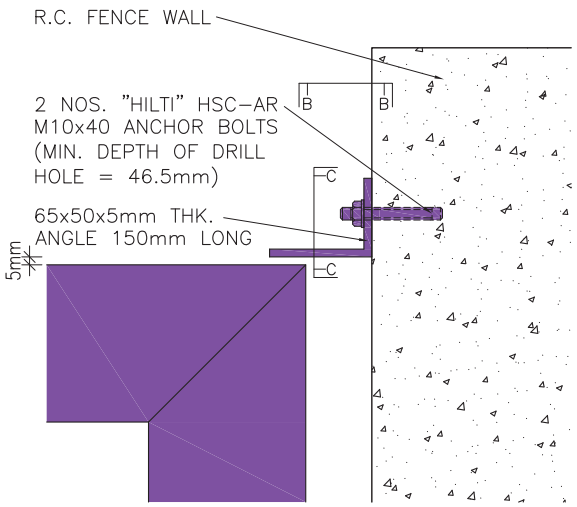

DETAIL 2 : RESTRAINT AGAINST VERTICAL MOVEMENT

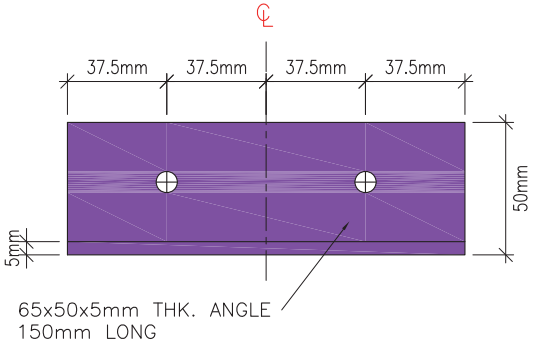

SECTION C–C

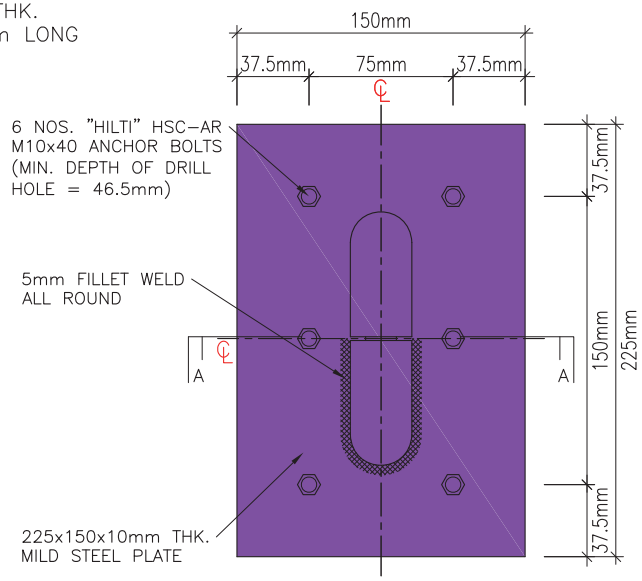

HINGE DETAIL

MINOR WORKS ITEM 2.16	ERECTION, ALTERATION OR REPAIR OF METAL GATE AT A FENCE WALL OR AT AN ENTRANCE TO A BUILDING	SHEET 2 OF 2

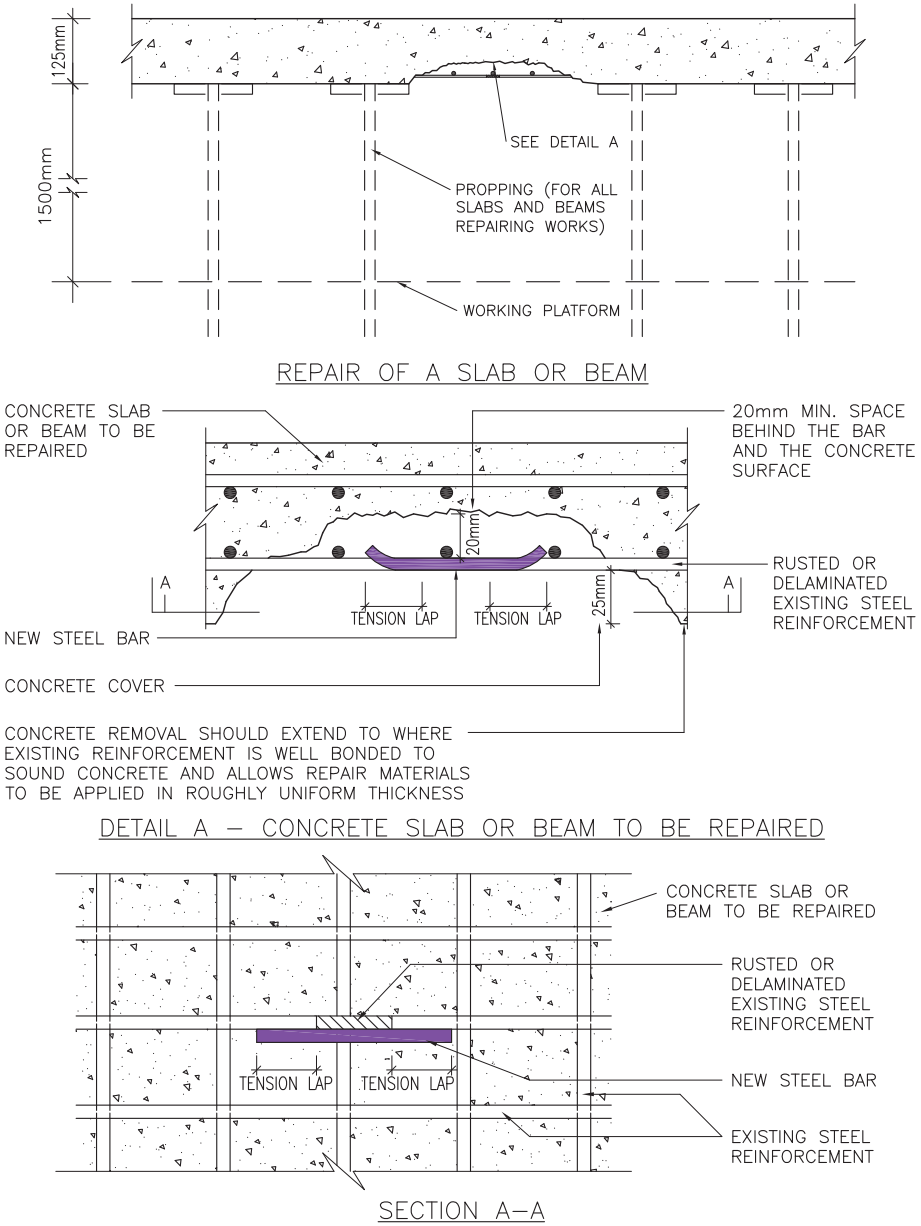

GENERAL NOTES :

1. The works carried out shall comply with the Buildings Ordinance and the provisions of other enactment. (Reference can be made to the examples listed in Sections 3 and 10 of the Guidelines.)
2. All works shall comply with the following CoP/ standards:
   - Building (Construction) Regulations
   - Code of Practice for Structural Use of Concrete 2004 (2nd Edition)
   - Code of Practice for Fire Resisting Construction 1996
   - Concrete shall comply with CS1: 1990
   - BS 5975 Code of Practice for Falsework

PREPARATION WORKS :

1. Obtain the existing design drawings/ information for reference of FRP, concrete cover, concrete strength, steel bar dimension & etc. prior to the commencement of works.
2. Carry out condition survey of the parent structure/ existing condition prior to the commencement of works.
3. All props should be adequately supported. Points of contact between props and underlying structural slabs/ beams should comprise of base plates resting on distributing members to ensure not exceeding their design capacities.

SAFETY AND PRECAUTIONARY MEASURES :

1. Fence–off the working area from the public. Diversion arrangement shall be taken if necessary.
2. Erect propping system according to the supplier's instruction to the beam/ slab to be repaired.
3. Working platform details shall refer to the drawing no. GN–2.

WORKING PROCEDURES :

1. Hack off finishes/ concrete at the repair area by hand held mechanical tools to expose the steel bar and sound concrete substrate.
2. Remove rust on steel bar and apply primer to steel bar. If the corroded steel bar is found substantially less than its original size after derusting, replacement of the steel bar with the same size is required. The lap length for the existing/ new steel bar shall be dependent on the type of repair mortar adopted and shall be in accordance with supplier's instructions.
3. Apply proprietary repair mortar system according to the manufacturer's instructions.
4. Formworks may be used where necessary.
5. Remove the formworks after the period specified by the supplier of repair mortar.
6. Remove the proppings and working platform and clean the site.

MINOR WORKS ITEM 2.17	**REPAIR OF SLAB OR BEAM (OTHER THAN A FLAT SLAB, CANTILEVERED BEAM, RIBBED SLAB, WAFFLE SLAB, PRE-STRESSED BEAM, POST-TENSIONED BEAM, CANTILEVERED BEAM, TRANSFER PLATE OR TRANSFER BEAM) IN ACCORDANCE WITH THE ORIGINAL DESIGN**

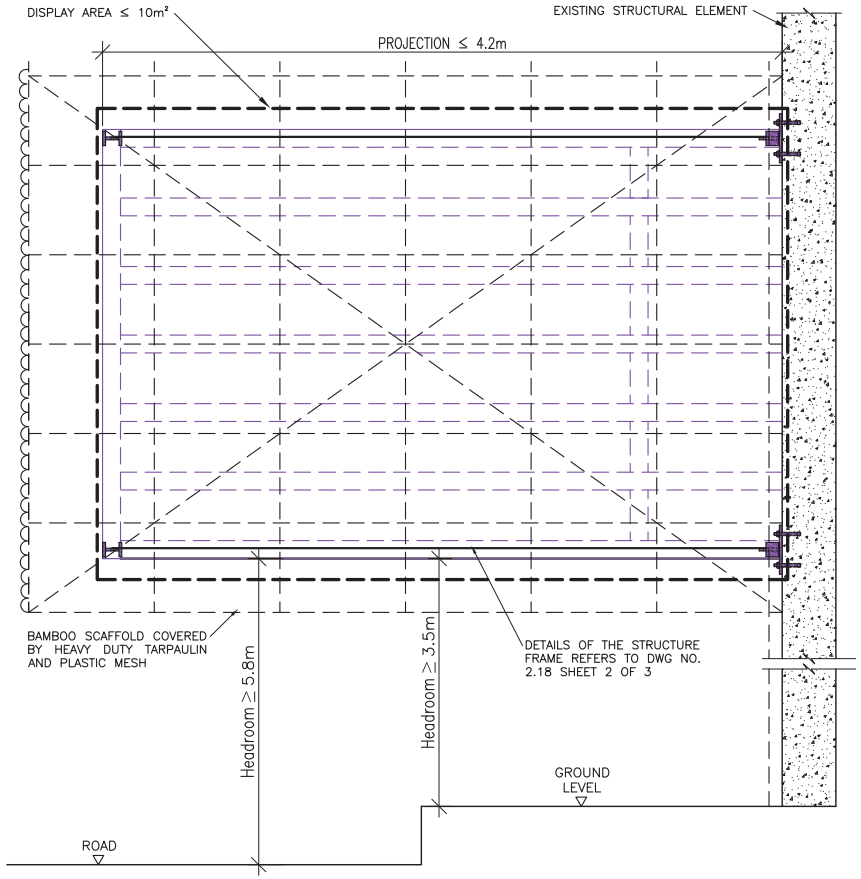

GENERAL NOTES :

1. The works carried out shall comply with the Buildings Ordinance and the provisions of other enactment. (Reference can be made to the examples listed in Sections 3 and 10 of the Guidelines.)
2. All works shall comply with the following CoP/ standards:
   - Building (Construction) Regulations
   - Code of Practice on Wind Effects in Hong Kong 2004
   - Code of Practice for Structural Use of Steel 2005
3. All structural steel to be grade S275 to BS EN 10025 and shall be hot dip galvanized to BS EN ISO 1461.
4. All connections to be 5mm fillet weld all round or butt weld with weld strength, pw = 220 N/mm² unless otherwise specified.
5. All anchor bolts to be Hilti HSA–R–M20 and shall be installed according to the manufacturer's specification.
6. Existing concrete grade of column is assumed to be Grade 20 with a minimum thickness of 500mm.
7. All removal of existing concrete shall be carried out by using of hand–held tools carefully.
8. All existing reinforcement should not be damaged.
9. All steel members shall be protected with one coat of "UNITHERM 38091" fire resistance paint with thickness of 1.5mm (Hp/A = 175).
10. All banners should be made of non–combustible material.
11. Tolerances such as lack of fit, hole diameter and dimensions etc shall be allowed in accordance with the provision of "Code of Practice for the Structural Use of Steel 2005".

DESIGN LOADS :

1. Dead Load = 0.20kN/m² (Cladding)
2. Live Load = 0.50kN/m²
3. Wind Load = 2.01kN/m² with total pressure coeff. 2.0

PREPARATION WORKS:

1. Obtain the existing design drawings/ information of the signboard for reference.
2. Carry out condition survey of the parent structure/ existing condition prior to the commencement of works.
3. If the signboard consists of light emitting diodes, disconnect the power to the signboard before the commencement of works.
4. Obtain the original design of the approved structure for reference of any required reinstatement works.
5. The structural adequacy of the supporting parent structure due to the additional installation of minor works must be checked to the satisfaction of structural requirement prior to the carrying out of minor works.
6. Plastering or rendering should be removed to expose concrete face before installation of anchor bolts and base plate.

SAFETY AND PRECAUTIONARY MEASURES :

1. Fence–off the working area from the public. Diversion arrangement shall be taken if necessary.
2. Bamboo scaffolds details shall refer to the following figure as shown on drawing no. GN–1.
   - Figure 4 Working platform on a double–row bamboo scaffold
   - Figure 5 Bamboo scaffold for signboard

WORKING PROCEDURES :

A. Erection
   1. Install the signboard as per the drawing.
   2. Make good and reinstate the affected areas of the parent building.
   3. Dismantle the bamboo scaffold and clean the site.

B. Alteration
   1. Remove the display surface/ loose parts from the signboard.
   2. Remove the defective member and replace with a new member having the same size of the existing member.
   3. Make good and reinstate the affected areas of the parent building.
   4. Dismantle the bamboo scaffold and clean the site.

Remarks :
1. This case excludes minor works item 3.16.
2. The signboard does not consist of stone.

MINOR WORKS ITEM 2.18	ERECTION OR ALTERATION OF PROJECTING SIGNBOARD	SHEET 1 OF 3

DESIGN FORCES AT BASEPLATE (UNFACTORED)
NOTATION AS SHOWN IN ELEVATION A

BASE PLATE	DEAD + LIVE LOADS(kN)			DEAD + LIVE + WIND LOADS(kN)		
	Fx	Fy	Fz	Fx	Fy	Fz
1 (OR 3)*	0	0	0	−27.6	0	10.1*
2 (OR 4)*	0	0	0	−27.5	0	10.1*
5	−13.0	1.3	0	9.7	1.5	2.0
6	1.8	2.0	0	7.9	2.2	2.5
7	0.5	2.0	0	−0.1	2.0	2.8
8	0	2.0	0	−1.2	2.0	2.9
9	−0.5	2.0	0	−1.1	2.0	2.8
10	−1.8	2.0	0	4.2	1.9	2.5
11	13.0	1.3	0	35.8	1.2	2.0

* Direction of Fz at baseplates 1 and 2 are opposite to baseplate 3 and 3, respectively.

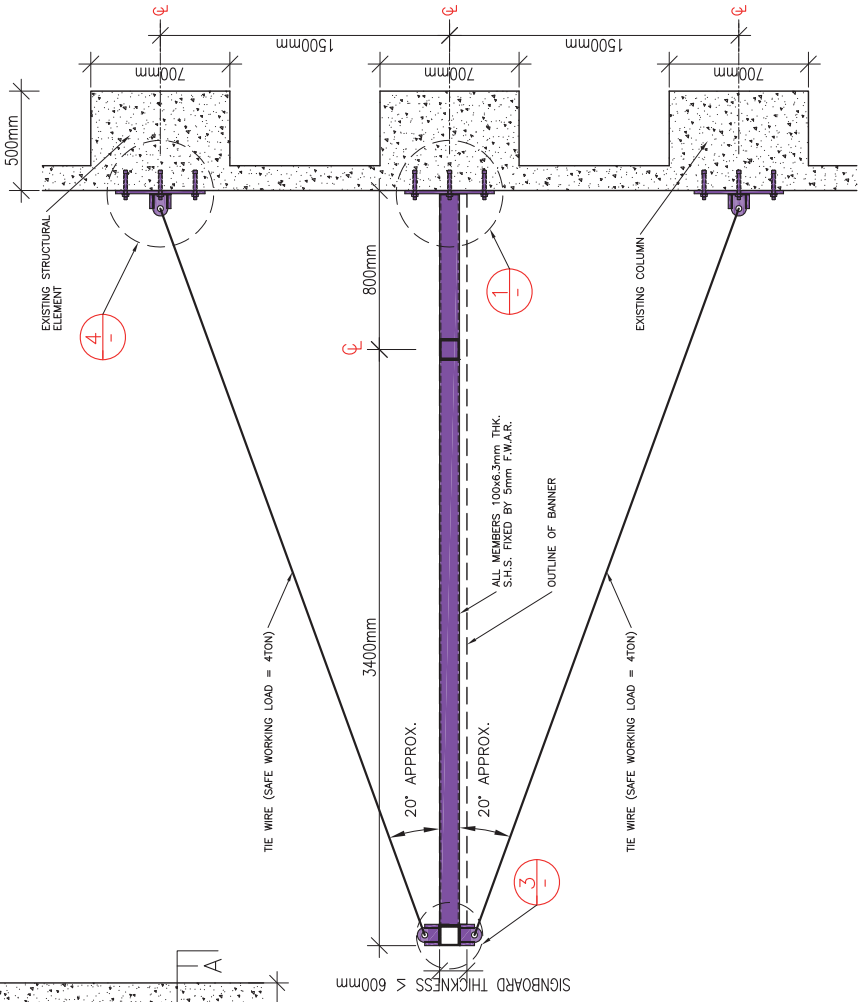

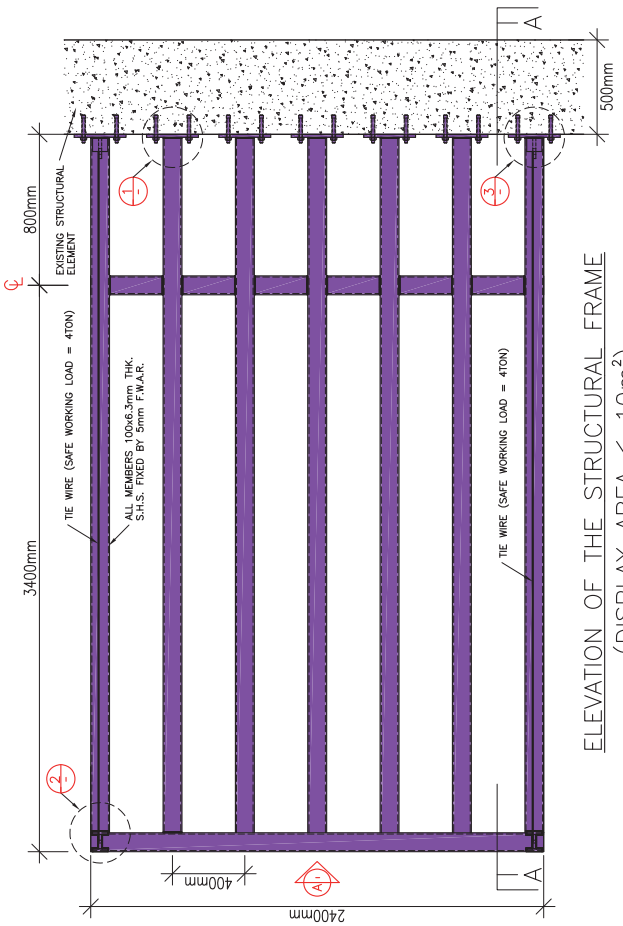

ELEVATION OF THE STRUCTURAL FRAME
(DISPLAY AREA ≤ 10m²)

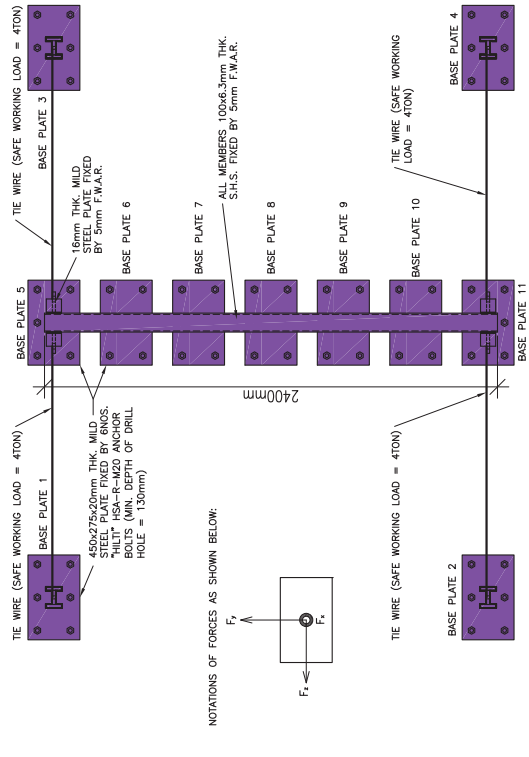

SHEET 2 OF 3

ERECTION OR ALTERATION OF PROJECTING SIGNBOARD

MINOR WORKS ITEM 2.18

2010/10

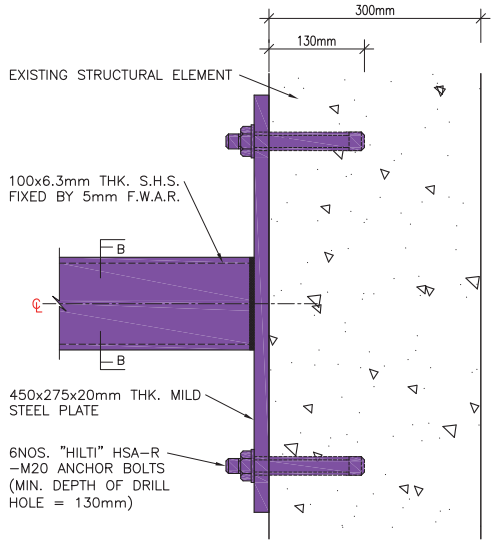

DETAIL 1

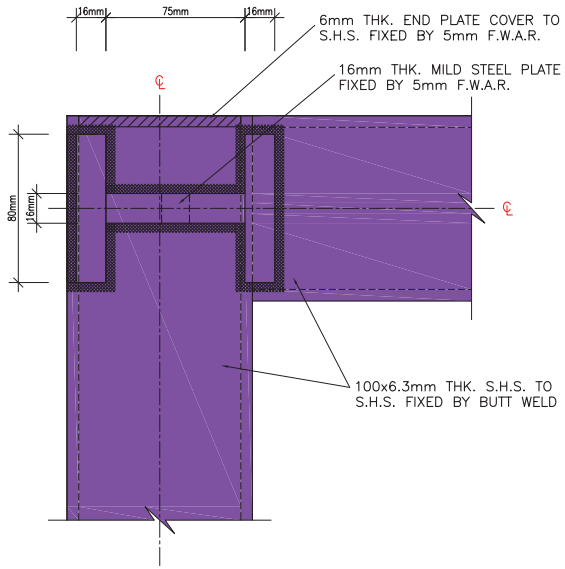

DETAIL 2

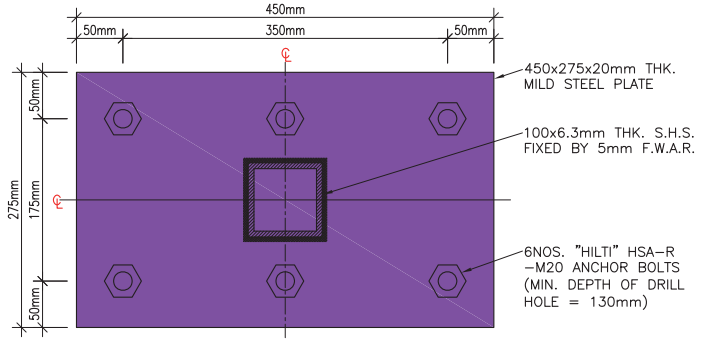

SECTION B–B

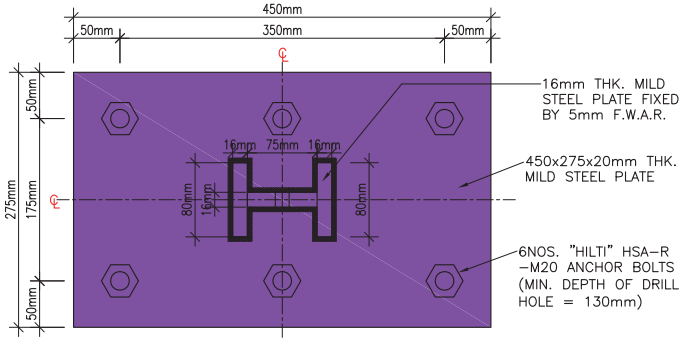

ELEVATION B

DESIGN FORCE : F = 30kN (AXIAL)

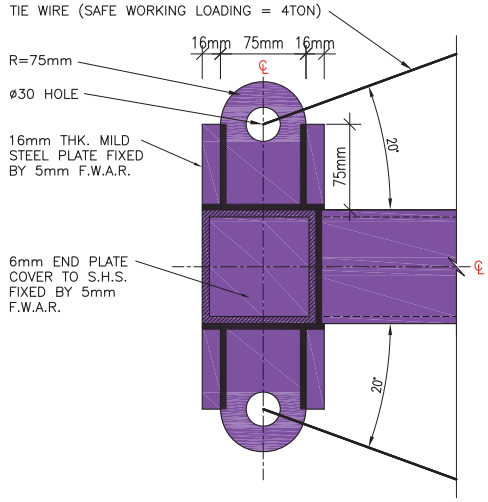

DETAIL 3

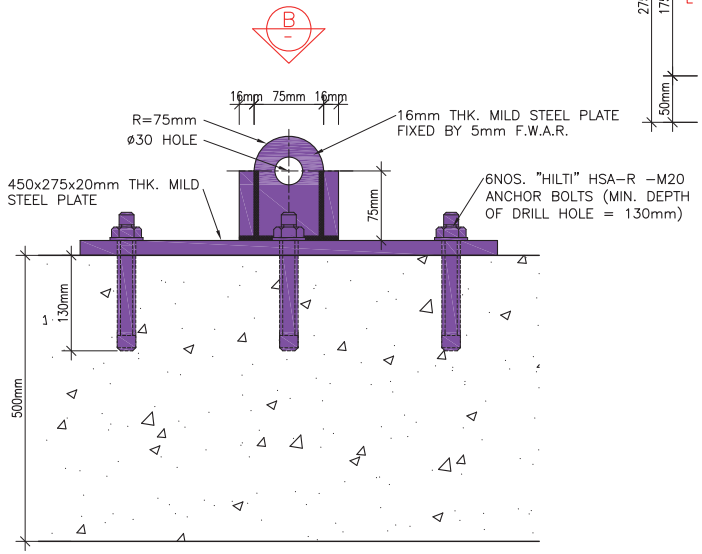

DETAIL 4

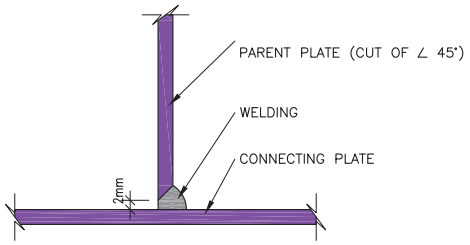

BUTT WELD DETAIL

MINOR WORKS ITEM 2.18	ERECTION OR ALTERATION OF PROJECTING SIGNBOARD	SHEET 3 OF 3

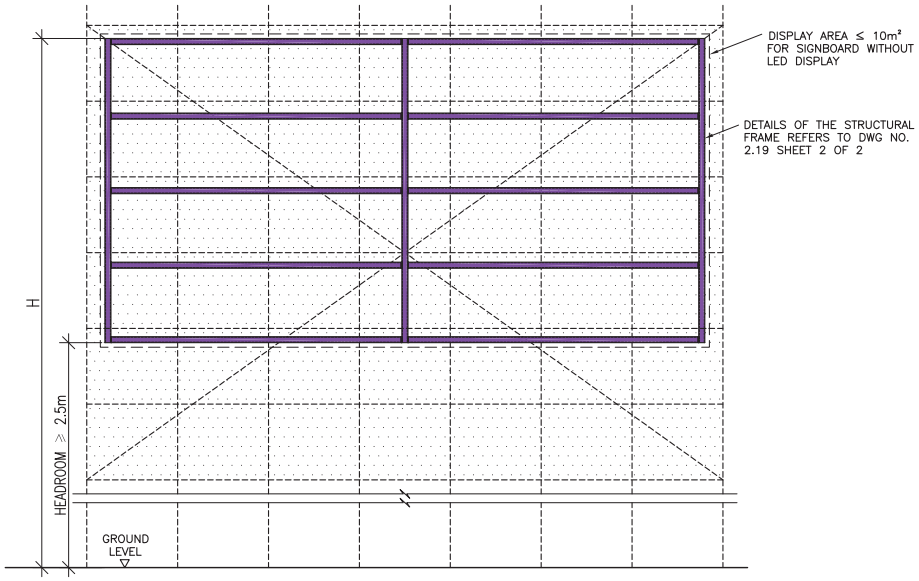

FRONT ELEVATION

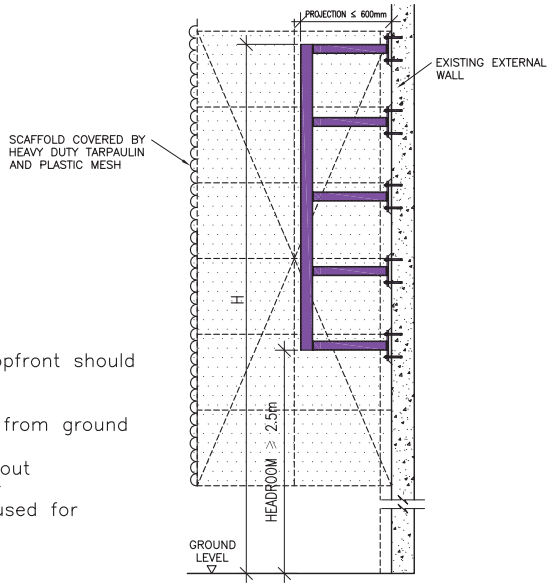

SIDE ELEVATION

Wall signboards at overhead of shopfront should have :

(i) a minimum clearance of 2.5m from ground ; and
(ii) be structurally independent without supporting any roller shutter or air–conditioning unit or being used for storage.

GENERAL NOTES :

1. The works carried out shall comply with the Buildings Ordinance and the provisions of other enactment. (Reference can be made to the examples listed in Sections 3 and 10 of the Guidelines.)
2. All works shall comply with the following CoP/ standards:
   - Building (Construction) Regulations
   - Code of Practice on Wind Effects in Hong Kong 2004
   - Code of Practice for Structural Use of Steel 2005
3. All structural steel to be grade S275 to BS EN 10210 and shall be hot dip galvanized to BS EN ISO 1461.
4. All connections to be 4mm fillet weld all round with weld strength, p_w = 220 N/mm² unless otherwise specified.
5. All anchor bolts to be Hilti HSA–R–M12 and shall be installed according to the manufacturer's specification.
6. Existing concrete grade of wall is assumed to be Grade 20 with a minimum thickness 150mm.
7. All removal of existing concrete shall be carried out by using of hand–held tools carefully.
8. All existing reinforcement should not be damaged.
9. All steel members shall be protected with one coat of "UNITHERM 38091" fire resistance paint with thickness of 1.5mm (Hp/A = 175).
10. Tolerances such as lack of fit, hole diameter and dimensions etc shall be allowed in accordance with the provision of "Code of Practice for the Structural Use of Steel 2005".

DESIGN LOADS :

1. Dead Load = 0.2kN/m²
2. Live Load = 1.00kN/m
3. Wind Load = 2.86kN/m² with total pressure coeff. of 1.4

PREPARATION WORKS :

1. Obtain the existing design drawings/ information of the signboard for reference.
2. Carry out condition survey of the parent structure/ existing condition prior to the commencement of works.
3. Obtain the original design of the approved structure for reference of any required reinstatement works.
4. The structural adequacy of the supporting parent structure due to the additional installation of minor works must be checked to the satisfaction of structural requirement prior to the carrying out of minor works.
5. Plastering or rendering should be removed to expose concrete face before installation of anchor bolts and base plate.

SAFETY AND PRECAUTIONARY MEASURES :

1. Fence–off the working area from the public. Diversion arrangement shall be taken if necessary.
2. Bamboo scaffolds details shall refer to the following figures as shown on drawing no. GN–1.
   - Figure 4 Working platform on a double–row bamboo scaffold
   - Figure 5 Bamboo scaffold for signboard

WORKING PROCEDURES :

A. Erection
   1. Install the signage as per the drawing.

B. Alteration
   1. Remove the defective members and replace with a new member by using the same size as per the existing member.
   2. Dismantle bamboo scaffold and clean the site.

REMARKS :

1. This case excludes item 10 of the Designated Exempted Works or minor works item 3.17.
2. The signboard does not consist of stone if H > 6m.
3. Display area ≤ 5m² if the signboard has LED display.

MINOR WORKS ITEM 2.19	ERECTION OR ALTERATION OF WALL SIGNBOARD	SHEET 1 OF 2

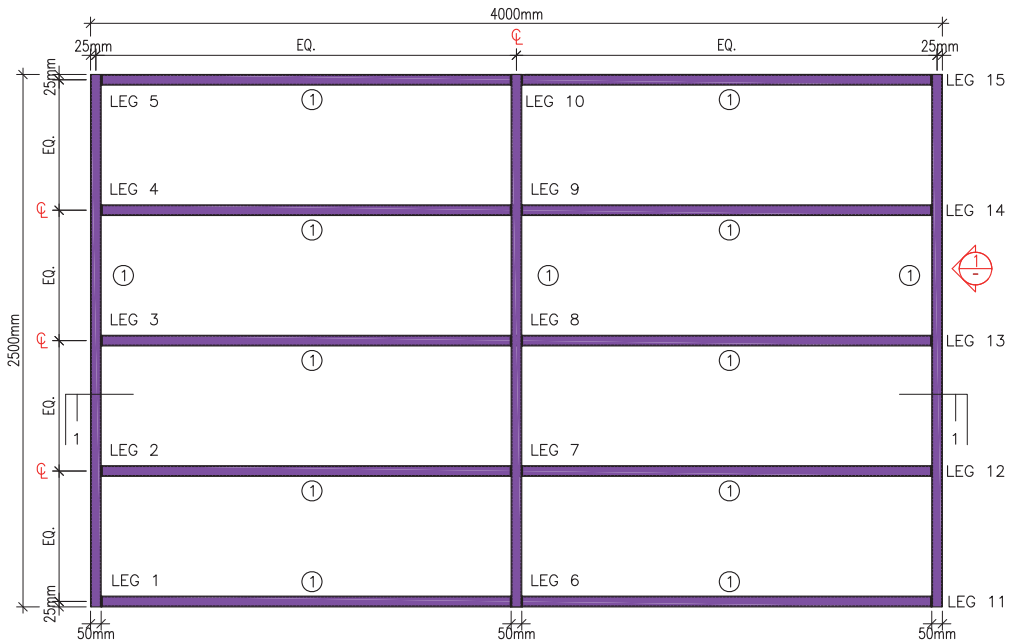

STRUCTURAL FRAME ELEVATION (NO LIGHT EMITTING DIODES & DISPLAY AREA ≤ 10m²)

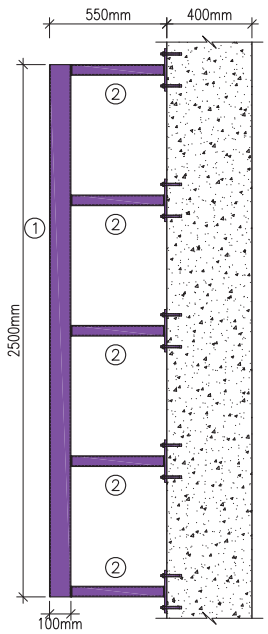

ELEVATION 1

MEMBER SCHEDULE	
1	100x50x4mm THK. R.H.S. FIXED BY FILLET WELD
2	50x4mm THK. S.H.S. FIXED BY FILLET WELD

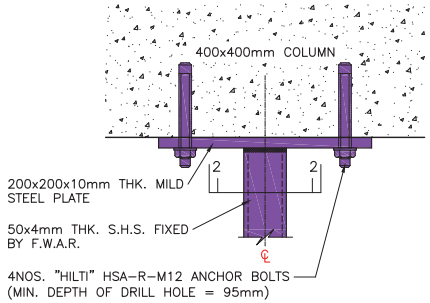

DETAIL A

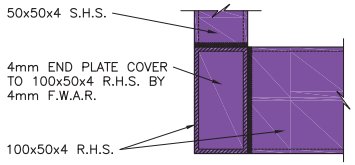

DETAIL B

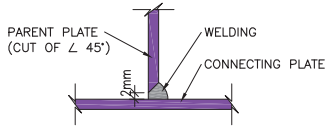

BUTT WELD DETAIL

DESIGN FORCES (UNFACTORED LOAD):
NOTATIONS OF FORCES ARE SHOWN IN SECTION 2–2

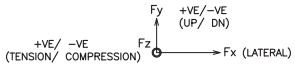

LEG	D + L (kN)			D + L + W (kN)		
	Fx	Fy	Fz	Fx	Fy	Fz
1	0	0.46	0.65	−0.27	0.45	−0.34
2	0	0.51	−0.26	−0.45	0.50	−2.26
3	0	0.49	0	−0.47	0.49	−2.03
4	0	0.51	0.26	−0.45	0.51	−1.74
5	0	0.46	−0.65	−0.28	0.46	−1.64
6	0	0.74	1.03	0	0.73	−1.85
7	0	0.82	−0.40	0	0.81	−5.90
8	0	0.80	0	0	0.80	−5.64
9	0	0.82	0.41	0	0.83	−5.09
10	0	0.75	−1.04	0	0.76	−3.93
11	0	0.46	0.65	0.27	0.45	−0.34
12	0	0.51	−0.26	0.45	0.50	−2.26
13	0	0.49	0	0.47	0.49	−2.03
14	0	0.51	0.26	0.45	0.51	−1.74
15	0	0.46	−0.65	0.28	0.46	−1.64

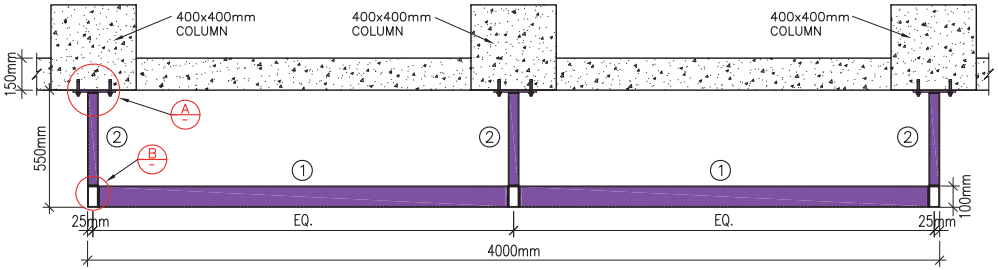

SECTION 1 – 1

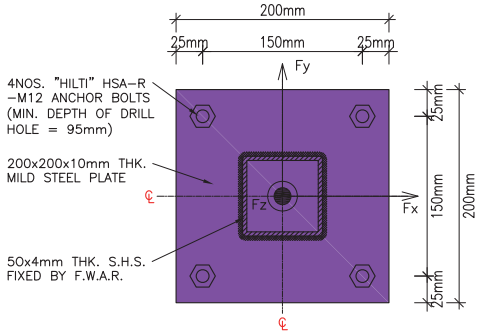

SECTION 2 – 2

MINOR WORKS ITEM 2.19	ERECTION OR ALTERATION OF WALL SIGNBOARD	SHEET 2 OF 2

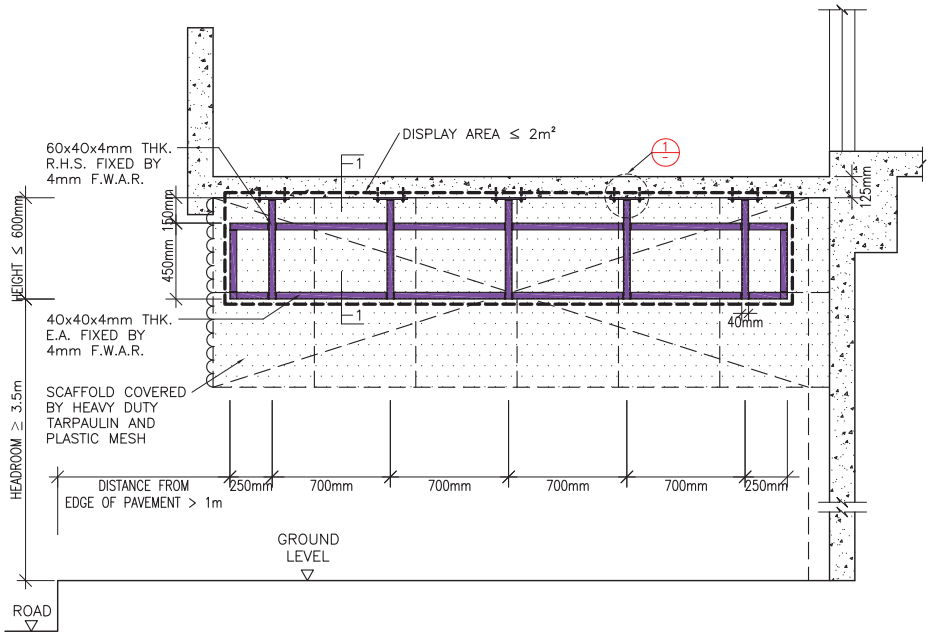

ERECTION OR ALTERATION OF SIGNBOARD

DESIGN FORCES PER LEG (UNFACTORED) :
Notations as shown in Section 2–2 below

Fx = 0kN
Fy = +/–1.27kN
Fz = 0.5kN
Mxx = +/–0.48kNm

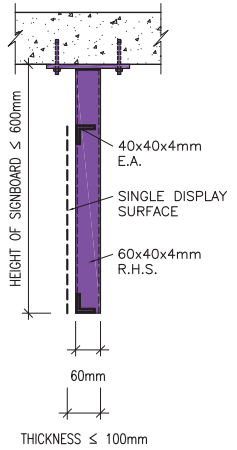

SECTION 1 – 1

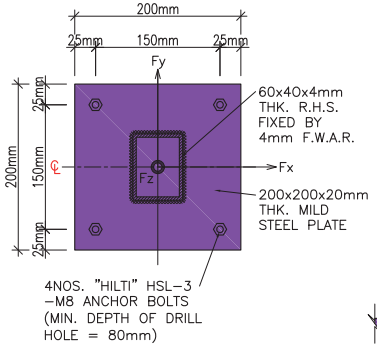

SECTION 2 – 2

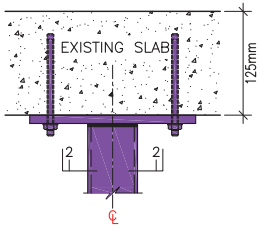

DETAIL 1

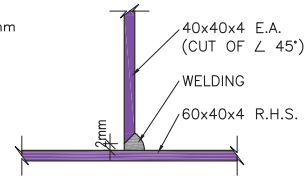

BUTT WELD DETAIL

GENERAL NOTES :

1. The works carried out shall comply with the Buildings Ordinance and the provisions of other enactment. (Reference can be made to the examples listed in Sections 3 and 10 of the Guidelines.)
2. All works shall comply with the following CoP/ standards:
   - Building (Construction) Regulations
   - Code of Practice on Wind Effects in Hong Kong 2004
   - Code of Practice for the Structural Use of Steel 2005
   - Code of Practice for the Structural Use of Concrete 2004
3. All structural steel to be grade S275 class 1 to BS EN 10025 and shall be hot dip galvanized to BS EN ISO 1461.
4. All connections to be 4 mm fillet weld all round or butt weld with weld strength, pw = 220 N/mm² to BS EN 1011 and all electrodes to BS EN ISO 2560.
5. All anchor bolts to be Hilti HSL–3 M8 and shall be installed according to the manufacturer's specification.
6. The existing concrete grade of reinforced concrete slab is assumed to be Grade 20 with a minimum thickness of 125 mm.
7. Tolerances such as lack of fit, hole diameter and dimensions etc shall be allowed in accordance with the provision of "Code of Practice for the Structural Use of Steel 2005"

DESIGN LOADS :

1. Dead Load = 250kg
2. Wind Load = 2.01kN/m² with total pressure coeff. of 2.0

PREPARATION WORKS:

1. Obtain the existing design drawings/ information of the signboard for reference.
2. Carry out condition survey of the parent structure/ existing condition prior to the commencement of works.
3. If the signboard consists of light emitting diodes, disconnect the power to the signboard before commencement works.
4. Obtain the original design of the approved structure for reference of any required reinstatement works.
5. The structural adequacy of the supporting parent structure due to the additional installation of minor works must be checked to the satisfaction of structural requirement prior to the carrying out of minor works.
6. Plastering or rendering should be removed to expose concrete face before installation of anchor bolts and base plate.

SAFETY AND PRECAUTIONARY MEASURES :

1. Fence–off the working area from the public. Diversion arrangement shall be taken if necessary.
2. Bamboo scaffolds details shall refer to the following figure as shown on drawing no. GN–1.
   - Figure 5 Bamboo scaffold for signboard

WORKING PROCEDURES :

A. Erection

1. Install the signboard as per the drawing.
2. Make good and reinstate the affected areas of the parent building.
3. Dismantle the bamboo scaffold and clean the site.

B. Alteration

1. Remove the display surface/ loose parts from the signboard.
2. Remove the defective member and replace with a new one having the same size as the existing member.
3. Make good and reinstate the affected areas of the parent building.
4. Dismantle the bamboo scaffold and clean the site.

Remarks : The sicnboard does not consist of stone.

MINOR WORKS ITEM 2.20	ERECTION OR ALTERATION OF SIGNBOARD ON OR HUNG UNDERNEATH THE SOFFIT OF A BALCONY OR CANOPY (OTHER THAN A CANTILEVERED SLAB)

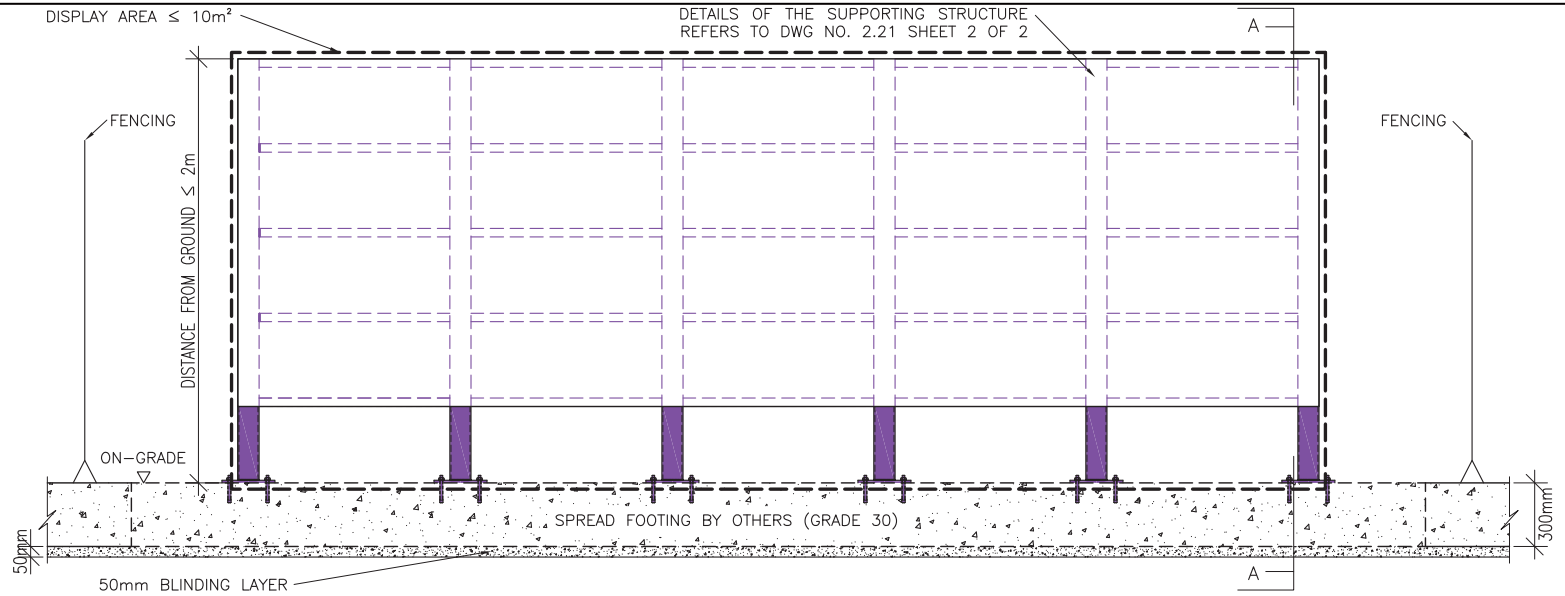

ERECTION OF AN OUTDOOR SIGNBOARD FIXED ON-GRADE

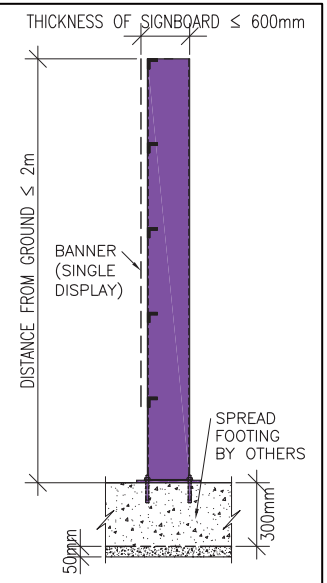

SECTION A – A

GENERAL NOTES :

1. The works carried out shall comply with the Buildings Ordinance and the provisions of other enactment. (Reference can be made to the examples listed in Sections 3 and 10 of the Guidelines.)
2. All works shall comply with the following CoP/ standards:
   Building (Construction) Regulations
   - Code of Practice on Wind Effects in Hong Kong 2004
   - Code of Practice for the Structural Use of Steel 2005
   - Code of Practice for the Structural Use of Concrete 2004
   - Code of Practice for Foundations
3. All structural steel to be grade S275 class 1 to BS EN 10210 for hollow section and BS EN 10025 for others and shall be hot dip galvanized to BS EN ISO 1461.
4. All connections to be 4 mm fillet weld all round or butt weld with weld strength, pw = 220 N/mm² to BS EN 1011 and all electrodes to BS EN ISO 2560.
5. All anchor bolts to be Hilti HSL-3 G M20/30 and shall be installed according to the manufacturer's specification.
6. Existing concrete grade and thickness is assumed to be Grade 20 and 200mm minimum respectively. New concrete grade and cover to be Grade 30 and 75mm respectively. Reinforcement to be high yield deformed bar with Fy = 460 N/mm².
7. All steel members shall be protected with one coat of "UNITHERM 38091" fire resistance paint with thickness of 1.5mm (Hp/A = 175).
8. All banners should be made of non-combustible material and fixed on the horizontal members accordingly.
9. Tolerances such as lack of fit, hole diameter and dimensions etc shall be allowed in accordance with the provision of "Code of Practice for the Structural Use of Steel 2005".

DESIGN LOADS :

1. Dead Load = 1kN/m²
2. Wind Load = 1.82kN/m² with Total pressure coeff. 2.0
3. Allowable bearing capacity of soil is assumed to be 50kN/m²

PREPARATION WORKS :

1. Obtain the existing design drawings/ information of the signboard for reference.
2. Carry out condition survey of the parent structure/ existing condition prior to the commencement of works.
3. Obtain the original design of the approved structure for reference of any required reinstatement works.
4. The structural adequacy of the supporting structure due to the additional installation of minor works must be checked to the satisfaction of structural requirement prior to the carrying out of minor works.
5. Plastering or rendering should be removed to expose concrete face before installation of anchor bolts and base plate.

SAFETY AND PRECAUTIONARY MEASURES :

1. Fence-off the working area from the public. Diversion arrangement shall be taken if necessary.

WORKING PROCEDURES :

A. Erection
   1. Install the signboard as per the drawing.
   2. Make good and reinstate the affected areas of the parent building.
   3. Dismantle the bamboo scaffold and clean the site.

B. Alteration
   1. Remove the display surface/ loose parts from the signboard.
   2. Remove the defective member and replace with a new member having the same size of the existing member.
   3. Make good and reinstate the affected areas of the parent building.
   4. Dismantle the bamboo scaffold and clean the site.

MINOR WORKS ITEM 2.21	ERECTION OR ALTERATION OF AN OUTDOOR SIGNBOARD FIXED ON-GRADE (OTHER THAN THE CONSTRUCTION OF A SPREAD FOOTING)	SHEET 1 OF 2

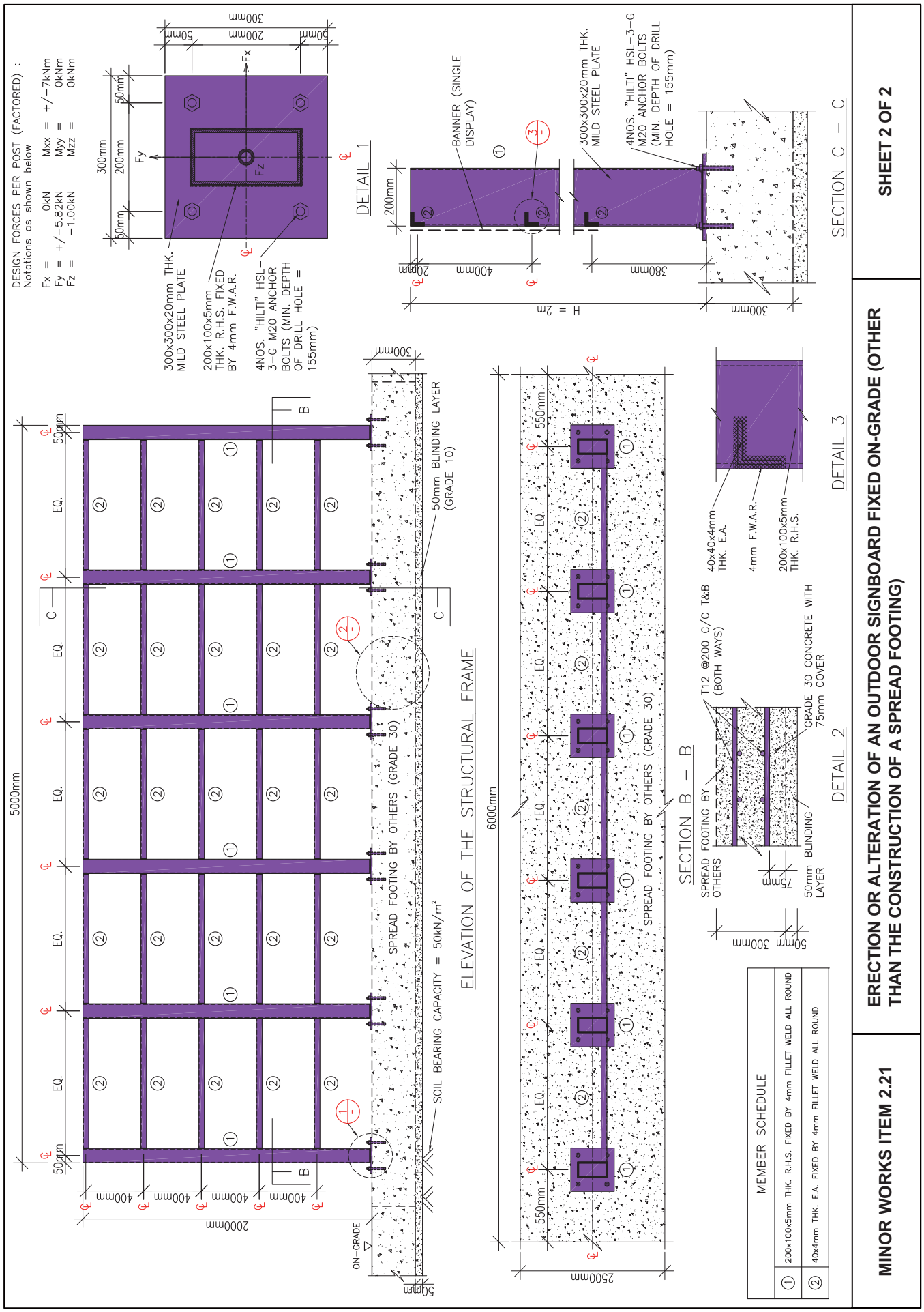
DESIGN FORCES PER POST (FACTORED) :
Notations as shown below
Fx = 0kN Mxx = +/-7kNm
Fy = +/-5.82kN Myy = 0kNm
Fz = -1.00kN Mzz = 0kNm
300mm
200mm
50mm
Fx
Fy
Fz
300x300x20mm THK. MILD STEEL PLATE
200x100x5mm THK. R.H.S. FIXED BY 4mm F.W.A.R.
4NOS. "HILTI" HSL-3-G M20 ANCHOR BOLTS (MIN. DEPTH OF DRILL HOLE = 155mm)
DETAIL 1
BANNER (SINGLE DISPLAY)
300x300x20mm THK. MILD STEEL PLATE
4NOS. "HILTI" HSL-3-G M20 ANCHOR BOLTS (MIN. DEPTH OF DRILL HOLE = 155mm)
200mm
400mm
380mm
H = 2m
300mm
SECTION C – C
5000mm
EQ.
50mm
2000mm
400mm
B
C
SPREAD FOOTING BY OTHERS (GRADE 30)
50mm BLINDING LAYER (GRADE 10)
SOIL BEARING CAPACITY = 50kN/m²
ON-GRADE
ELEVATION OF THE STRUCTURAL FRAME
6000mm
550mm
2500mm
SPREAD FOOTING BY OTHERS (GRADE 30)
SECTION B – B
40x40x4mm THK. E.A.
4mm F.W.A.R.
200x100x5mm THK. R.H.S.
DETAIL 3
T12 @200 C/C T&B (BOTH WAYS)
SPREAD FOOTING BY OTHERS
GRADE 30 CONCRETE WITH 75mm COVER
50mm BLINDING LAYER
75mm
300mm
DETAIL 2
MEMBER SCHEDULE
① 200x100x5mm THK. R.H.S. FIXED BY 4mm FILLET WELD ALL ROUND
② 40x4mm THK. E.A. FIXED BY 4mm FILLET WELD ALL ROUND
SHEET 2 OF 2
ERECTION OR ALTERATION OF AN OUTDOOR SIGNBOARD FIXED ON-GRADE (OTHER THAN THE CONSTRUCTION OF A SPREAD FOOTING)
MINOR WORKS ITEM 2.21

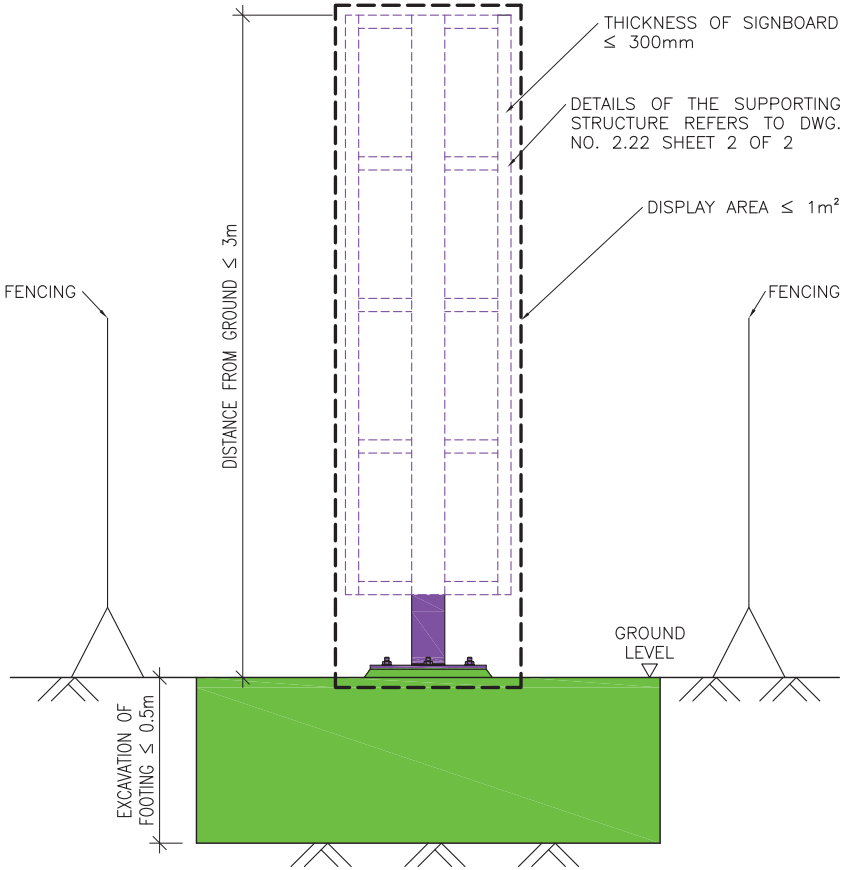

ERECTION

GENERAL NOTES :

1. The works carried out shall comply with the Buildings Ordinance and the provisions of other enactment. (Reference can be made to the examples listed in Sections 3 and 10 of the Guidelines.)
2. All works shall comply with the following CoP/ standards:
   - Building (Construction) Regulations
   - Code of Practice on Wind Effects in Hong Kong 2004
   - Code of Practice for the Structural Use of Steel 2005
   - Code of Practice for the Structural Use of Concrete 2004
   - Code of Practice for Foundations
3. All structural steel to be grade S275 class 1 to BS EN 10210 and shall be hot dip galvanized to BS EN ISO 1461.
4. All connections to be 4 mm fillet weld all round or butt weld with weld strength, pw = 220 N/mm² to BS EN 1011 and all electrodes to BS EN ISO 2560.
5. All anchor bolts to be Hilti HSA–R M20 and shall be installed according to the manufacturer's specification.
6. All concrete works shall comply with CS1.
7. Existing concrete grade and concrete cover are assumed to be Grade 30 and 75mm respectively.
8. Steel reinforcement shall comply with CS2:1995 and shall be bent in accordance with BS 4466.
9. Minimum anchorage and lap length are 600mm unless otherwise specified.
10. Minimum allowable ground pressure to be 50 kN/m².
11. All steel members shall be protected with one coat of "UNITHERM 38091" fire resistance paint with thickness of 1.5mm (Hp/A = 175).
12. All banners should be made of non–combustible material.
13. Tolerances such as lack of fit, hole diameter and dimensions etc shall be allowed in accordance with the provision of "Code of Practice for the Structural Use of Steel 2005".

DESIGN LOADS :

1. Dead Load = 1.00kN
2. Wind Load = 1.82kN/m² with total pressure coeff. 2.0 (5m above site ground level)

DESIGN DIMENSIONS :

A = 1.75m, B = 0.5m

PREPARATION WORKS:

1. Obtain the existing design drawings/ information of the signboard for reference.
2. Carry out condition survey of the parent structure/ existing condition prior to the commencement of works.
3. If the signboard consists of light emitting diodes, disconnect the power to the signboard before the commencement of works.
4. The structural adequacy of the supporting parent structure due to the additional installaiton of minor works must be checked to the satisfaction of structural requirement prior to the carrying out of minor works.
5. Plastering or rendering should be removed to expose concrete face before installation of anchor bolts and base plate.

SAFETY AND PRECAUTIONARY MEASURES :

1. Fence–off the working area from the public. Diversion arrangement shall be taken if necessary.

WORKING PROCEDURES :

A. Erection
   1. Install the signboard as per the drawing.
   2. Make good and reinstate the affected areas, if any, and clean the site.

B. Alteration
   1. Remove the display surface/ loose parts from the signboard.
   2. Remove the defective member and replace with a new member having the same size of the existing member.
   3. Make good and reinstate the affected areas, if any, and clean the site.

REMARKS :

1. The works do not involve excavation within area number 1 or 3 of the scheduled areas.
2. Reference shall be made to minor works item 2.10 for the construction of spread footing.

MINOR WORKS ITEM 2.22	ERECTION OR ALTERATION OF OUTDOOR SIGNBOARD TOGETHER WITH A SPREAD FOOTING	SHEET 1 OF 2

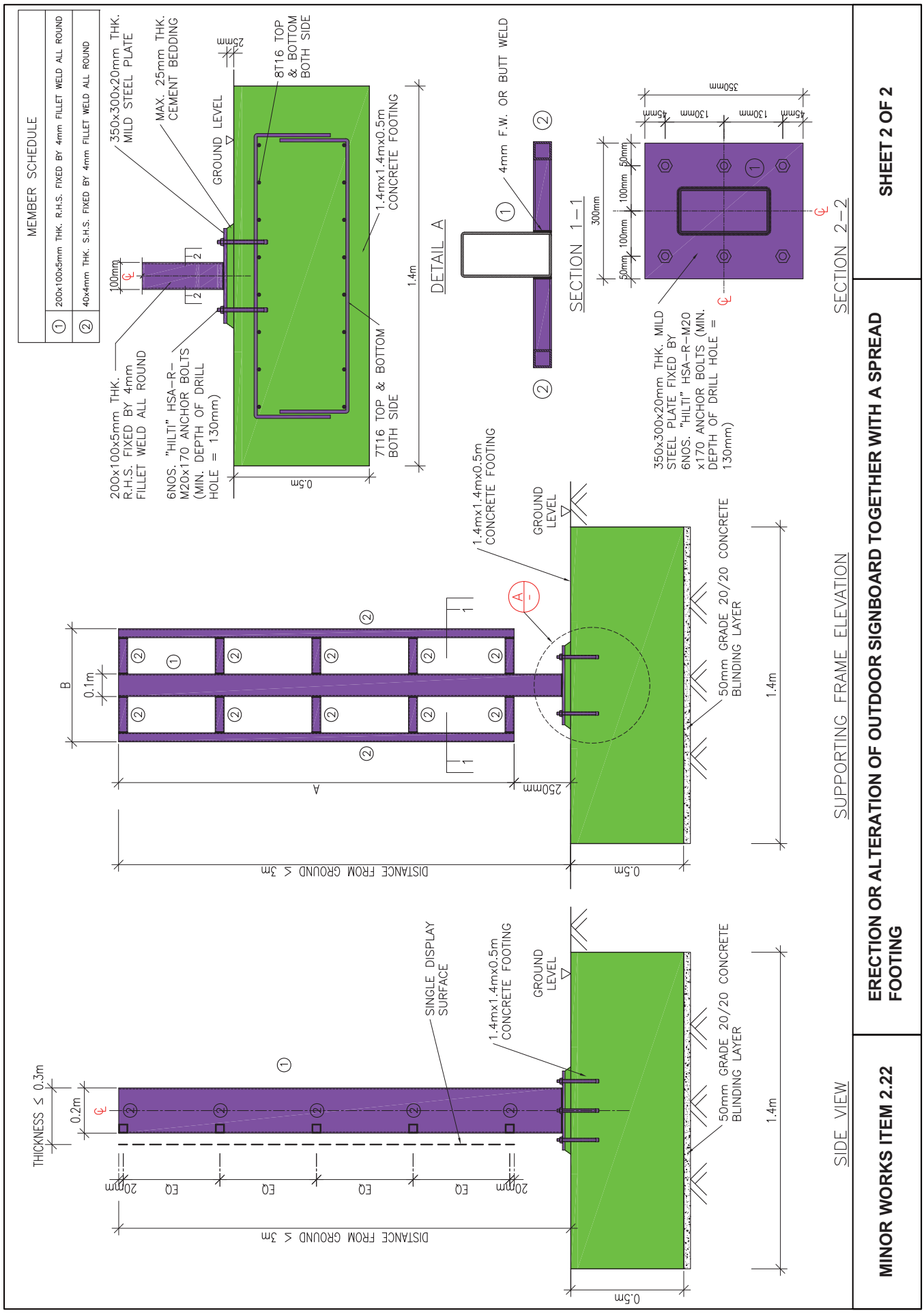
MEMBER SCHEDULE
① 200x100x5mm THK. R.H.S. FIXED BY 4mm FILLET WELD ALL ROUND
② 40x4mm THK. S.H.S. FIXED BY 4mm FILLET WELD ALL ROUND
350x300x20mm THK. MILD STEEL PLATE
MAX. 25mm THK. CEMENT BEDDING
GROUND LEVEL
8T16 TOP & BOTTOM BOTH SIDE
1.4mx1.4mx0.5m CONCRETE FOOTING
200x100x5mm THK. R.H.S. FIXED BY 4mm FILLET WELD ALL ROUND
6NOS. "HILTI" HSA-R-M20x170 ANCHOR BOLTS (MIN. DEPTH OF DRILL HOLE = 130mm)
7T16 TOP & BOTTOM BOTH SIDE
DETAIL A
4mm F.W. OR BUTT WELD
SECTION 1-1
350x300x20mm THK. MILD STEEL PLATE FIXED BY 6NOS. "HILTI" HSA-R-M20 x170 ANCHOR BOLTS (MIN. DEPTH OF DRILL HOLE = 130mm)
SECTION 2-2
SUPPORTING FRAME ELEVATION
DISTANCE FROM GROUND ≤ 3m
50mm GRADE 20/20 CONCRETE BLINDING LAYER
SINGLE DISPLAY SURFACE
SIDE VIEW
THICKNESS ≤ 0.3m
SHEET 2 OF 2
ERECTION OR ALTERATION OF OUTDOOR SIGNBOARD TOGETHER WITH A SPREAD FOOTING
MINOR WORKS ITEM 2.22

2010/10

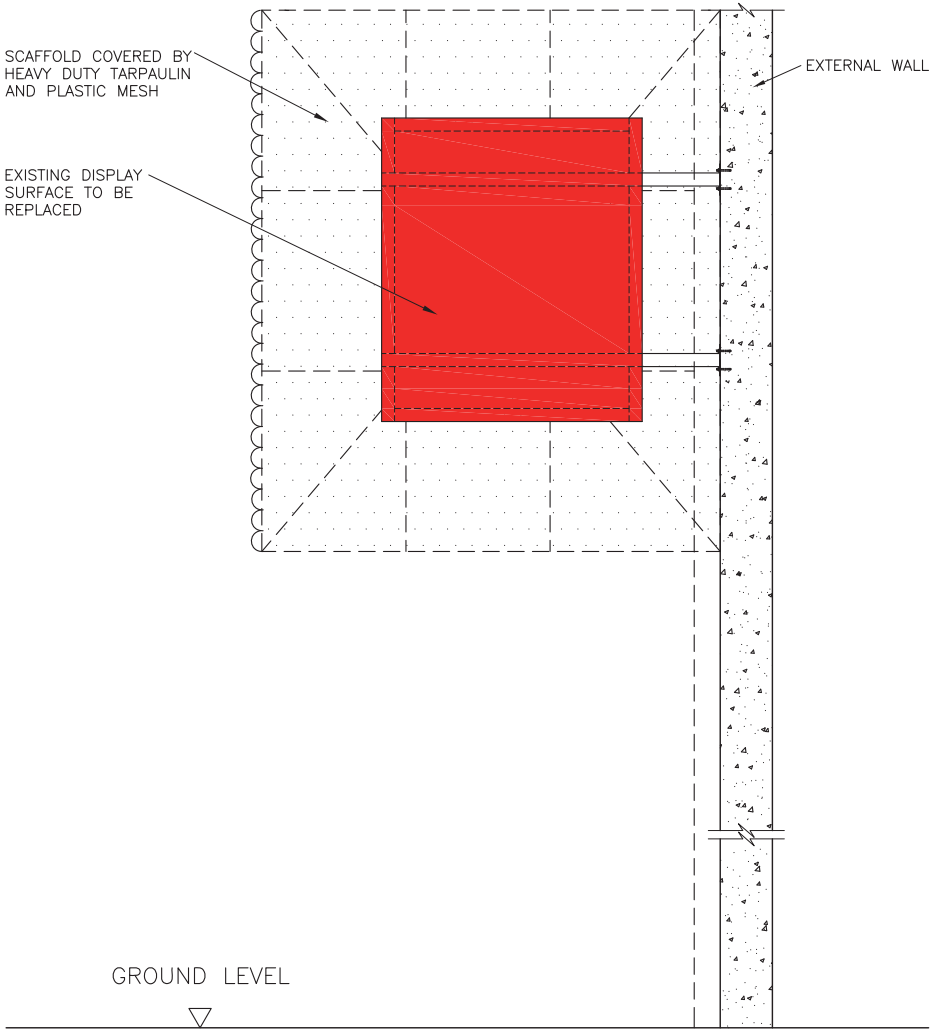

GENERAL NOTES :

The works carried out shall comply with the Buildings Ordinance and the provisions of other enactment. (Reference can be made to the examples listed in Sections 3 and 10 of the Guidelines.)

PREPARATION WORKS :

1. Obtain the original design drawings/ information for reference prior to the commencement of works
2. Carry out condition survey of the parent structure/ existing condition prior to the commencement of works.
3. Check the catalogue of the new display surface to ensure it is suitable for replacement.

SAFETY AND PRECAUTIONARY MEASURES :

1. Fence–off the working area from the public. Diversion arrangement shall be taken if necessary.
2. Bamboo scaffolds details shall refer to the following figure as shown on drawing no. GN–1.
   - Figure 5 Bamboo scaffold for signboard

WORKING PROCEDURES :

1. Remove the display surface and re–install the new surface using the same fixing method.
2. Make good and reinstate the affected areas of the parent building.
3. Dismantle the bamboo scaffold and clean the site.

MINOR WORKS ITEM 2.23	**REPLACEMENT OF THE DISPLAY SURFACE OF SIGNBOARD REFERRED TO IN ITEM 1.20, 1.21, 1.22, 1.23, 2.18, 2.19, 2.20, 2.21 OR 2.22**

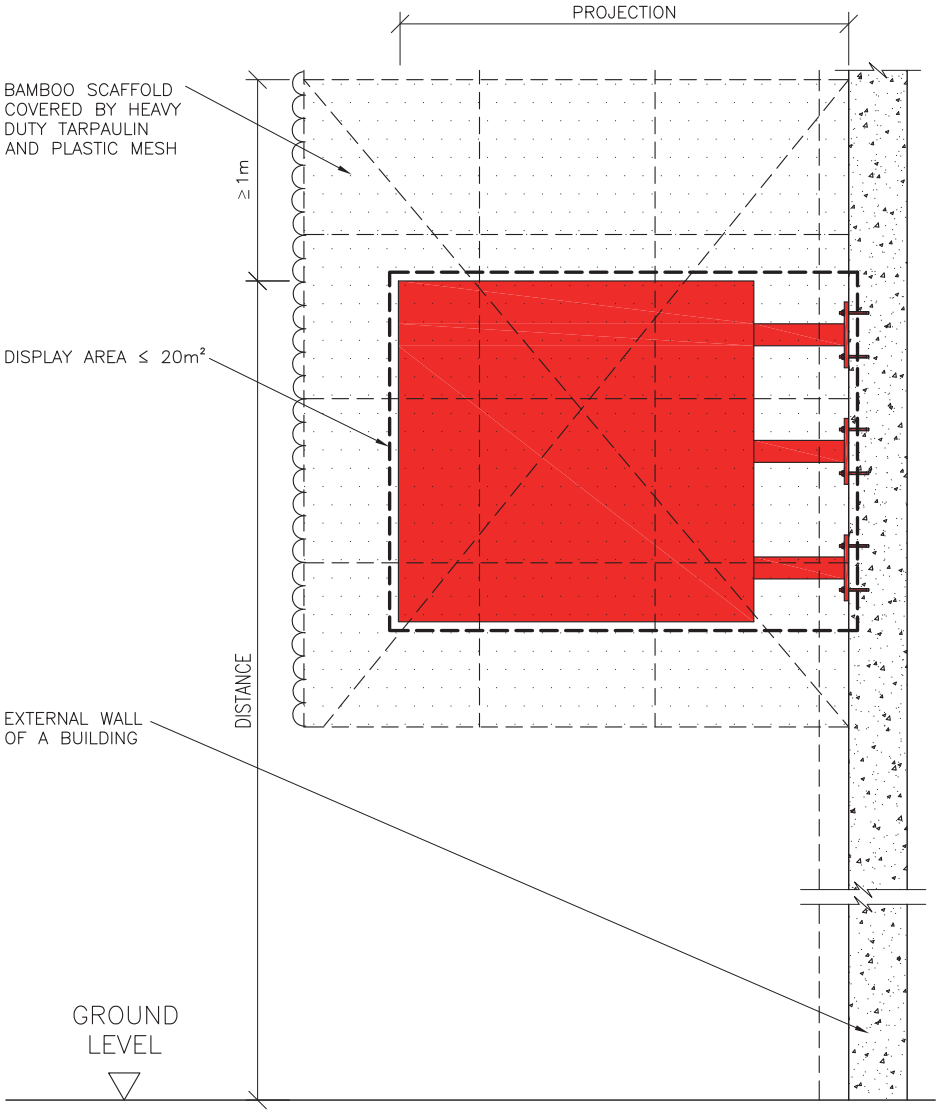

GENERAL NOTES :

The works carried out shall comply with the Buildings Ordinance and the provisions of other enactment. (Reference can be made to the examples listed in Sections 3 and 10 of the Guidelines.)

PREPARATION WORKS :

1. Obtain the existing design drawings/ information of the signboard for reference.
2. Carry out condition survey of the parent structure/ existing condition prior to the commencement of works.
3. If the signboard consists of light emitting diodes, disconnect the power connected to the signboard before commencement of works.
4. Obtain the original design of the approved structure for reference of any required reinstatement works.

SAFETY AND PRECAUTIONARY MEASURES :

1. Fence–off the working area from the public. Diversion arrangement shall be taken if necessary.
2. Bamboo scaffolds details shall refer to the following figure as shown on drawing no. GN–1.
   - Figure 5 Bamboo scaffold for signage

WORKING PROCEDURES :

1. Remove the display surface/ loose parts from the signboard.
2. Remove the supporting frame of the signboard by cutting the member into smaller size for construction waste disposal.
3. The removal works shall commence from the outmost side to the supporting ends at the parent structure.
4. Make good and reinstate the affected areas of the parent building.
5. Dismantle the bamboo scaffold and clean the site.

Remarks: This case excludes minor works item 3.18

MINOR WORKS ITEM 2.24	REMOVAL OF PROJECTING SIGNBOARD

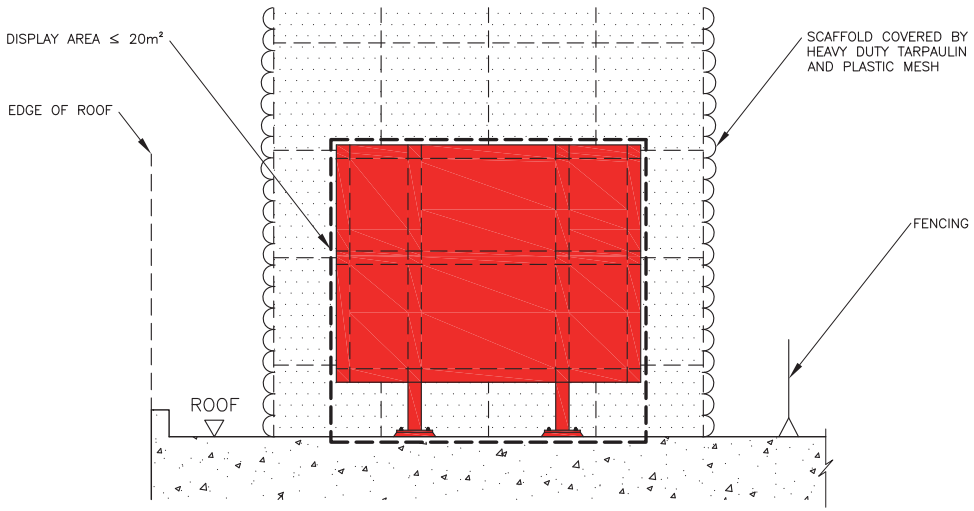

ON ROOF

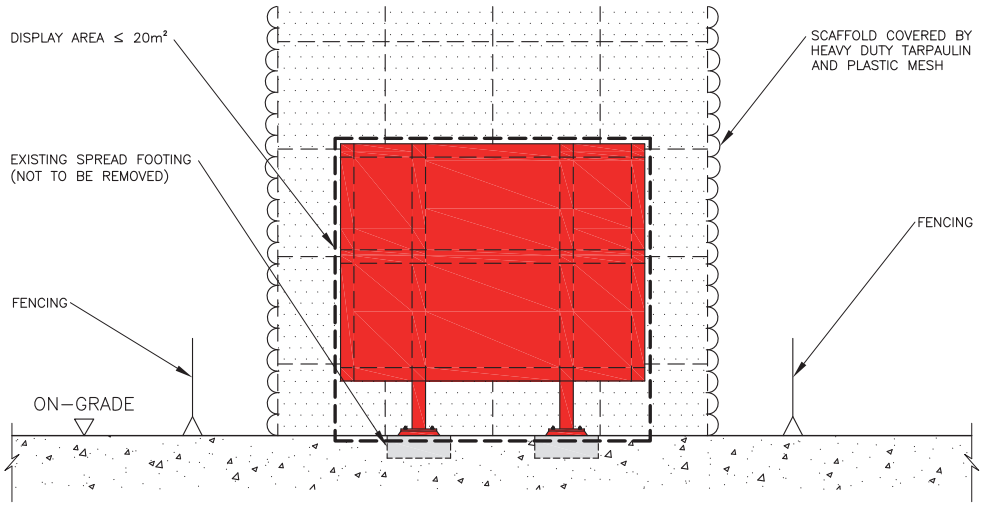

ON-GRADE (OTHER THAN THE REMOVAL OF THE SPREAD FOOTING OF ANY OUTDOOR SIGNBOARD)

GENERAL NOTES :

The works carried out shall comply with the Buildings Ordinance and the provisions of other enactment. (Reference can be made to the examples listed in Sections 3 and 10 of the Guidelines.)

PREPARATION WORKS :

1. Obtain the existing design drawings/ information of the signboard for reference.
2. If the signboard consists of light emitting diodes, disconnect all the power connected to the signboard before the commencement of any works.
3. Carry out condition survey of the parent structure/ existing condition prior to the commencement of works.
4. Obtain the original design of the approved structure for reference of any required reinstatement works.

SAFETY AND PRECAUTIONARY MEASURES :

1. Fence-off the working area from the public. Diversion arrangement shall be taken if necessary.
2. Bamboo scaffolds details shall refer to the following figure as shown on drawing no. GN-1.
   - Figure 4 Working platform on a double-row bamboo scaffold

WORKING PROCEDURES :

1. Remove the display board.
2. Remove the remaining structures of the signboard using hand held tools for subsequent construction waste disposal.
3. Make good and reinstate the affected areas.
4. Dismantle the bamboo scaffold and clean the site.

Remarks: This case excludes minor works item 3.19 or 3.22.

MINOR WORKS ITEM 2.25	REMOVAL OF SIGNBOARD LOCATED ON THE ROOF OF A BUILDING, OR ON ANY OUTDOOR SIGNBOARD FIXED ON-GRADE (OTHER THAN THE REMOVAL OF THE SPREAD FOOTING OF ANY OUTDOOR SIGNBOARD)

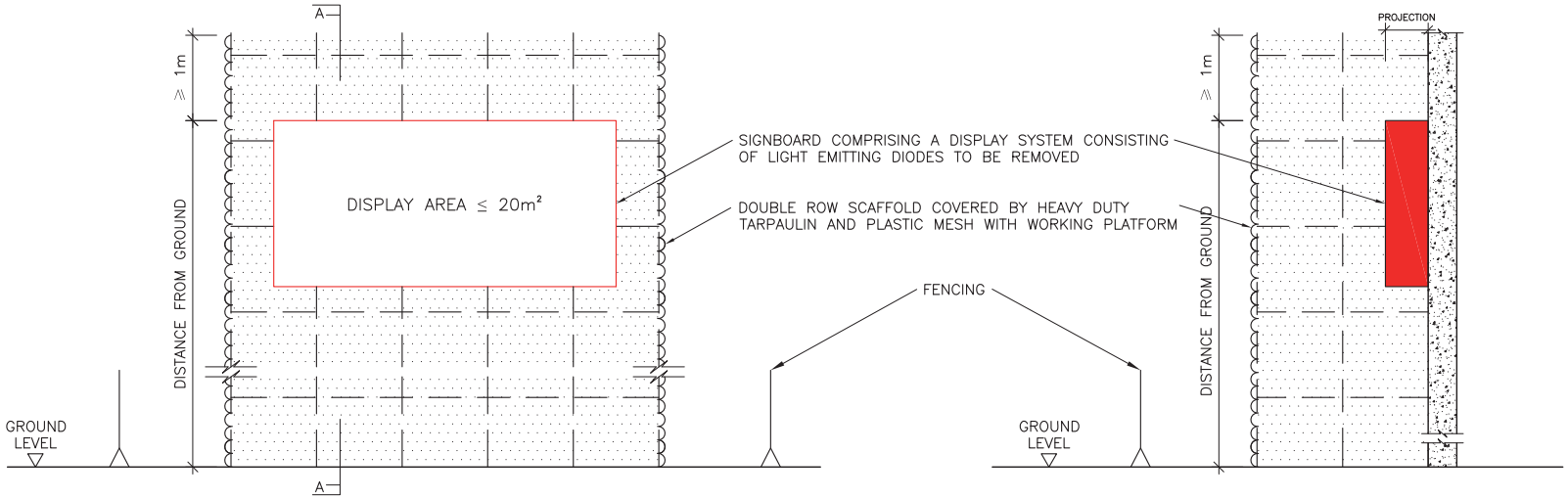

GENERAL NOTES :

The works carried out shall comply with the Buildings Ordinance and the provisions of other enactment. (Reference can be made to the examples listed in Sections 3 and 10 of the Guidelines.)

PREPARATION WORKS :

1. Obtain the existing design drawings/ information of the signboard for reference.
2. Carry out condition survey of the parent structure/ existing condition prior to the commencement of works.
3. If the signboard consists of light emitting diodes, disconnect the power connected to the signboard before the commencement of works.
4. Obtain the original design of the approved structure for reference of any required reinstatement works.

SAFETY AND PRECAUTIONARY MEASURES :

1. Fence–off the working area from the public. Diversion arrangement shall be taken if necessary.
2. Bamboo scaffolds details shall refer to the following figure as shown on drawing no. GN–1.
   - Figure 4 Working platform on a double–row bamboo scaffold

WORKING PROCEDURES :

1. Remove the display surface/ loose parts from the signboard.
2. Remove the supporting frame of the signboard by cutting the member into smaller size for construction waste disposal.
3. The removal works shall commence from the top to the bottom.
4. Make good and reinstate the affected areas of the parent building.
5. Dismantle the bamboo scaffold and clean the site.

Remarks: This case excludes item 11 of the Designated Exempted Works and minor works item 3.20.

MINOR WORKS ITEM 2.26	REMOVAL OF WALL SIGNBOARD	SHEET 1 OF 2

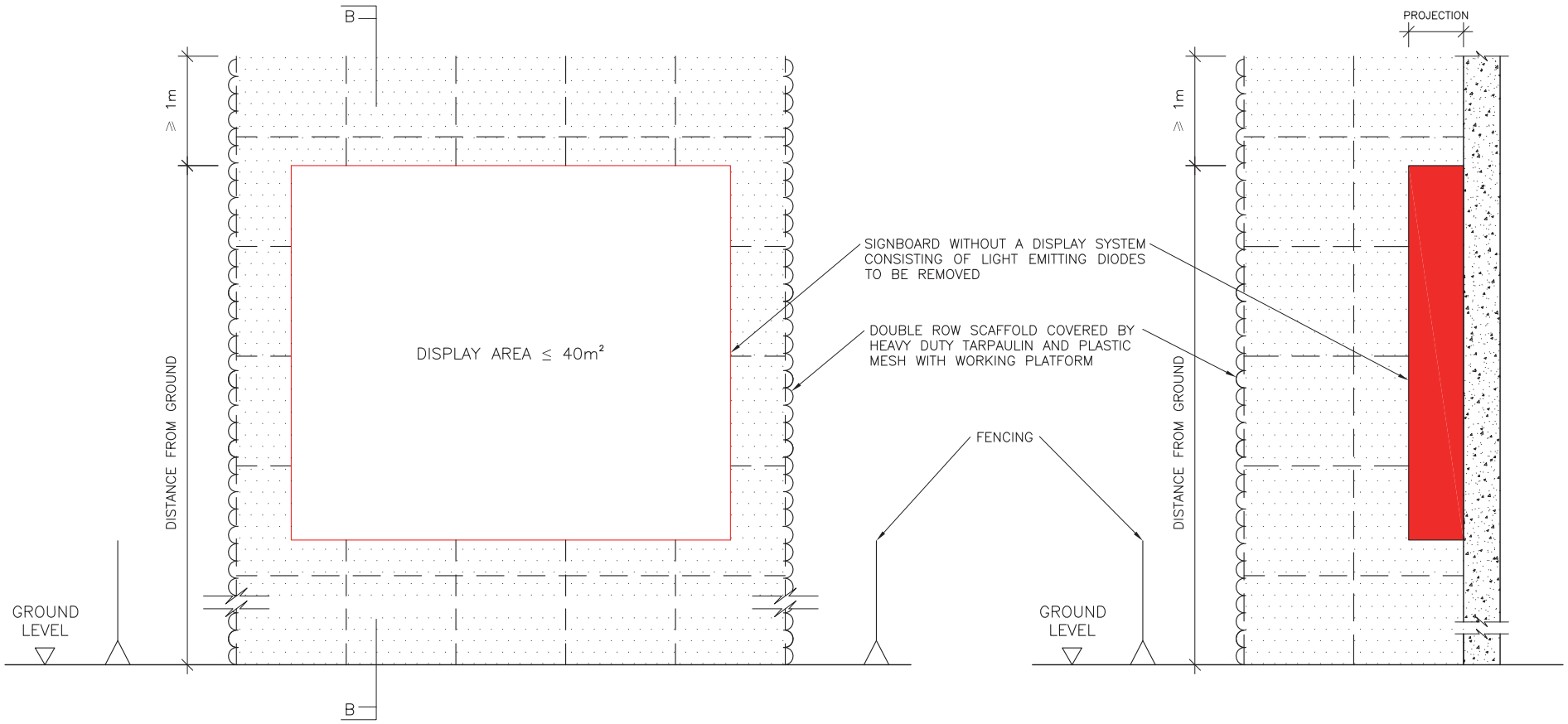

ELEVATION

SECTION B–B

CASE 2

MINOR WORKS ITEM 2.26	REMOVAL OF WALL SIGNBOARD	SHEET 2 OF 2

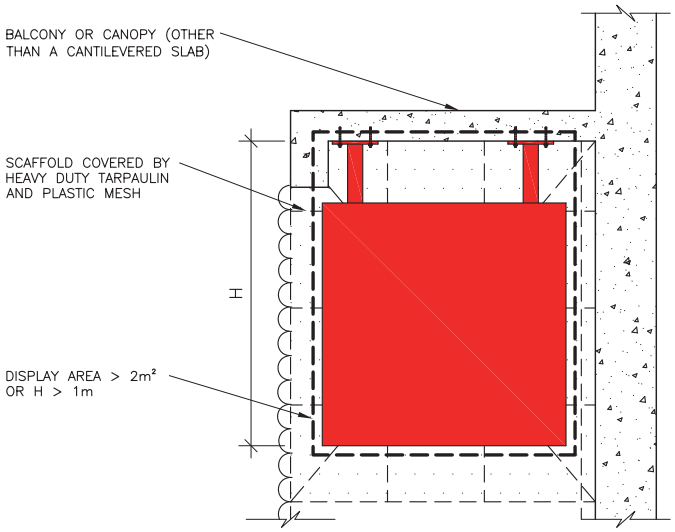

CASE 1: HUNG UNDERNEATH

OR

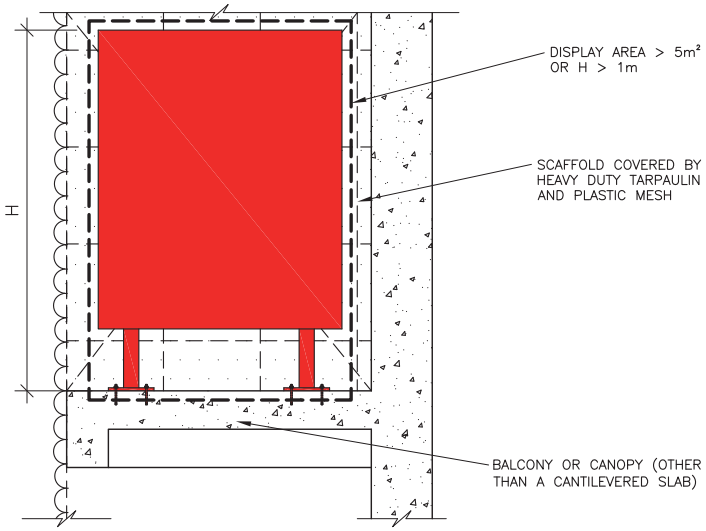

CASE 2: LOCATED ON

GENERAL NOTES :

The works carried out shall comply with the Buildings Ordinance and the provisions of other enactment. (Reference can be made to the examples listed in Sections 3 and 10 of the Guidelines.)

PREPARATION WORKS :

1. Obtain the existing design drawings/ information for reference.
2. If the signboard consists of light emitting diodes, disconnect all the power connected to the signboard before the commencement of any works on site.
3. Carry out condition survey of the parent structure/ existing condition prior to the commencement of works.
4. Obtain the original design of the approved structure for reference of any required reinstatement works.

SAFETY AND PRECAUTIONARY MEASURES :

1. Fence–off the working area from the public. Diversion arrangement shall be taken if necessary.
2. Bamboo scaffolds details shall refer to the following figures as shown on drawing no. GN–1.
   - Figure 4 Working platform on a double–row bamboo scaffold
   - Figure 5 Bamboo scaffold for signboard

WORKING PROCEDURES :

1. Remove the display surface/ loose parts from the signboard.
2. Remove the hanging down sign by cutting the member into smaller size from the bottom to the top for construction waste disposal or remove the supporting frame of the signboard in case 2 by cutting the member into smaller size from the top to the bottom for construction waste disposal.
3. Make good and reinstate the affected areas (including waterproofing) of the parent building.
4. Dismantle the bamboo scaffold and clean the site.

Remarks : This case excludes minor works item 3.21.

MINOR WORKS ITEM 2.27	**REMOVAL OF SIGNBOARD LOCATED ON OR HUNG UNDERNEATH THE SOFFIT OF A BALCONY OR CANOPY (OTHER THAN A CANTILEVERED SLAB)**

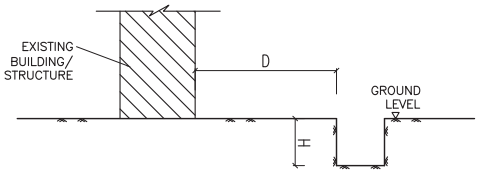

H≤ 1.5m, D≥ H

CONDITIONAL DIAGRAM 1

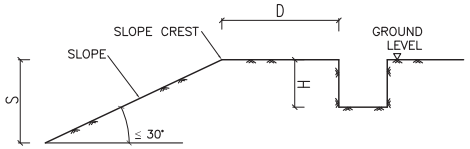

H≤ 1.5m, D≥ S

CONDITIONAL DIAGRAM 2

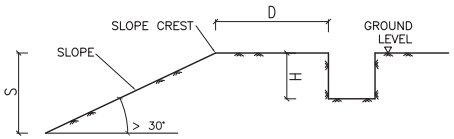

H≤ 1.5m, S≤3m, D≥1.5S

CONDITIONAL DIAGRAM 3

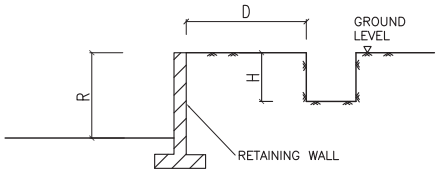

H≤ 1.5m, R≤3m, D≥1.5R

CONDITIONAL DIAGRAM 4

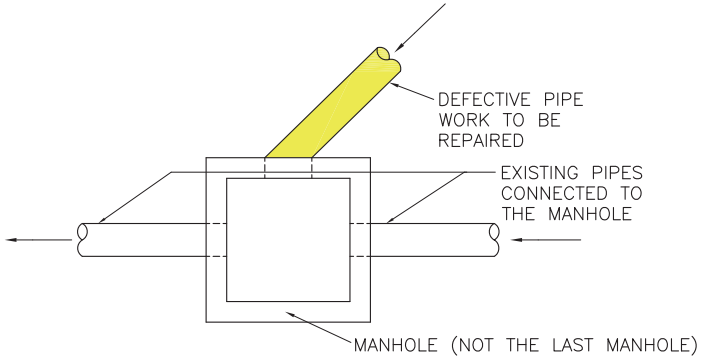

PLAN

REPAIR OF UNDERGROUND DRAIN

GENERAL NOTES :

The works carried out shall comply with the Buildings Ordinance and the provisions of other enactment. (Reference can be made to the examples listed in Sections 3 and 10 of the Guidelines.)

PREPARATION WORKS:

1. Obtain and investigate all underground utilities drawings/ information prior to the commencement of works.
2. Obtain the existing design drawing/ information for reference prior to the commencement of works.
3. Carry out condition survey of the adjoining structure/ existing condition prior to the commencement works.
4. If the works would involve suspension of the drain system, inform the affected parties in advance.

SAFETY AND PRECAUTIONARY MEASURES :

1. Fence–off the working area from the public. Diversion arrangement shall be taken if necessary.
2. Shoring support is required if the depth of trench more than 1.2m. Erection method shall be referred to "Guide to Trench Excavations" published by Utilities Technical Liaison Committee – Highways Department and Geotechnical Engineering Office – Civil Engineering Department (February 2003)
   a) The sizes of the structural members (e.g timber boards, struts and walings) and the spacings between struts depend on the actual excavation depth, ground conditions and other factors affecting the loading on the shoring system.
   b) Half timber board shoring may be adequate for moderately form to firm soil provided that the groundwater level is below the bottom of the trench.

WORKING PROCEDURES :

1. Carry out excavation and backfilling work in accordance with minor works item 2.11.
2. Remove the defective pipe work.
3. Install new drain pipe and seal up the connection at the manhole using waterproof cement mortar.
4. Any removed pipe works shall be sprayed with diluted bleaching agent (bleaching agent: water = 1:99) and pack into plastic bag for construction waste disposal.
5. Carry out water test to the new drain pipe for any leakage.
6. Backfilling and reinstate the top surface.

Remarks: This works excludes excavation within area number 1 or 3 of the scheduled areas.

MINOR WORKS ITEM 2.28	REPAIR OF UNDERGROUND DRAIN

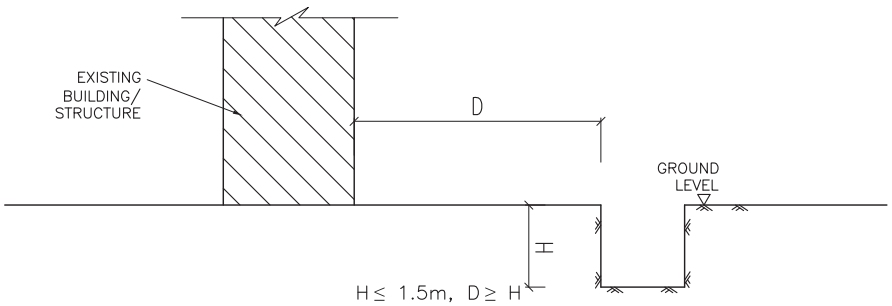

CONDITIONAL DIAGRAM 1

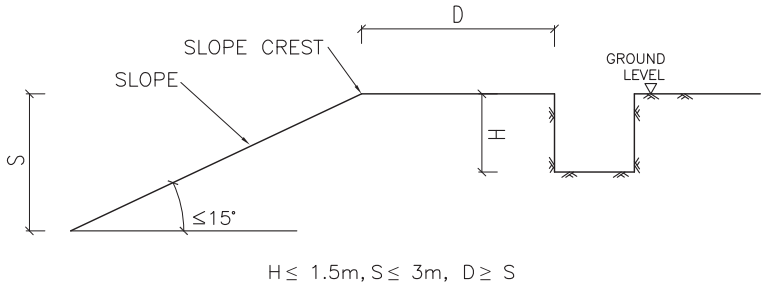

CONDITIONAL DIAGRAM 2

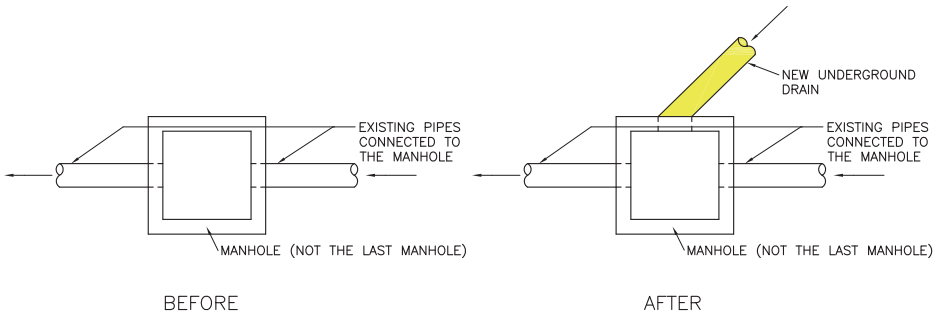

PLAN

ADDITION/ ALTERATION OF UNDERGROUND DRAIN

GENERAL NOTES :

The works carried out shall comply with the Buildings Ordinance and the provisions of other enactment. (Reference can be made to the examples listed in Sections 3 and 10 of the Guidelines.)

PREPARATION WORKS:

1. Obtain and investigate all underground utilities drawings/ information prior to the commencement of works.
2. Obtain the existing design drawing/ information for reference prior to the commencement of works.
3. Carry out condition survey of the adjoining structure/ existing condition prior to the commencement works.
4. If the works would involve suspension of the drain system, inform the affected parties in advance.

SAFETY AND PRECAUTIONARY MEASURES :

1. Fence–off the working area from the public. Diversion arrangement shall be taken if necessary.
2. Shoring support is required if the depth of trench more than 1.2m. Erection method shall be referred to "Guide to Trench Excavations" published by Utilities Technical Liaison Committee – Highways Department and Geotechnical Engineering Office – Civil Engineering Department (February 2003)
   a) The sizes of the structural members (e.g timber boards, struts and walings) and the spacings between struts depend on the actual excavation depth, ground conditions and other factors affecting the loading on the shoring system.
   b) Half timber board shoring may be adequate for moderately form to firm soil provided that the groundwater level is below the bottom of the trench.

WORKING PROCEDURES :

1. Carry out excavation and backfilling work in accordance with minor works item 2.11.
2. Install the new pipe work and seal up the connection at the manhole using waterproof cement mortar.
3. Carry out water test to the new drain pipe for any leakage.
4. Backfilling and reinstate the top surface.

Remarks: This works excludes excavation within area number 1 or 3 of the scheduled areas.

MINOR WORKS ITEM 2.29	ADDITION OR ALTERATION OF UNDERGROUND DRAIN

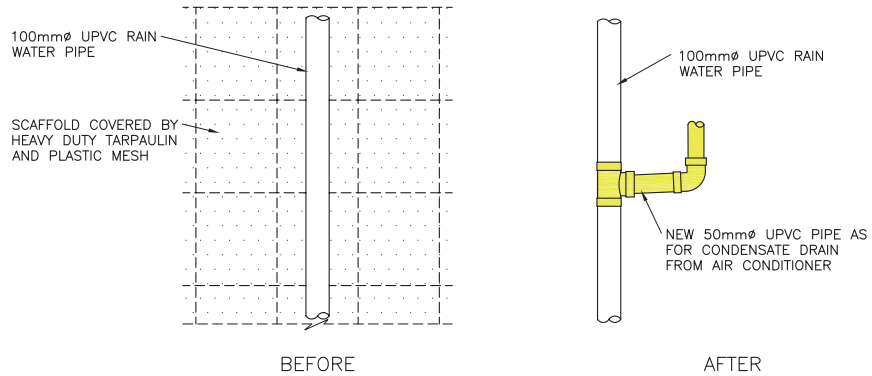

ERECTION

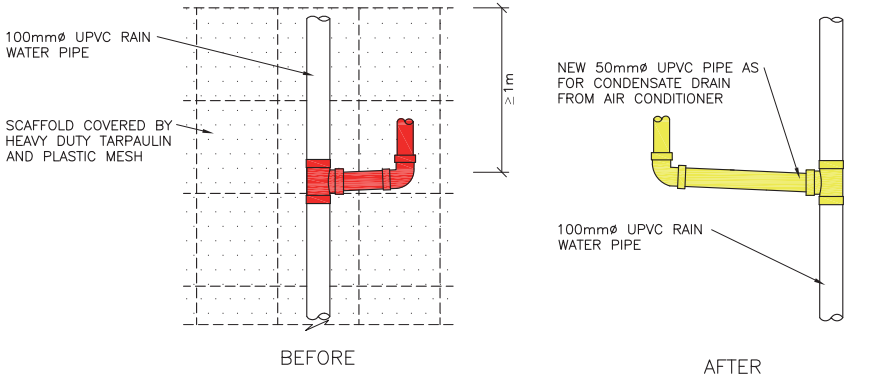

ALTERATION

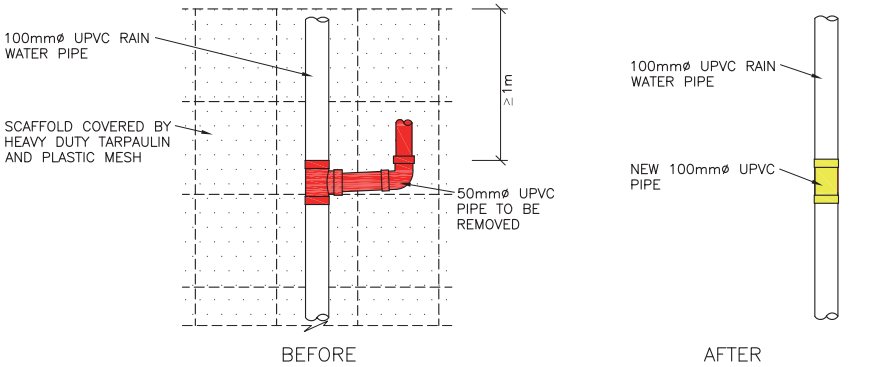

REMOVAL

MATERIAL SPECIFICATION :

Plastic rainwater pipes and fittings to be UPVC to BS4576. Plastic soil and ventilating pipes and fittings to be UPVC to BS4514. Plastic waste pipes and fittings to be ABS, MUPVC, PP or PE based to BS5255. Plastic flushing water service pipes and fittings to be UPVC to BS3505 class D and BS4346: Pt. 1 and Pt. 2.

GENERAL NOTES :

1. The works carried out shall comply with the Buildings Ordinance and the provisions of other enactment. (Reference can be made to the examples listed in Sections 3 and 10 of the Guidelines.)
2. The requirements of PNAP APP–93 should be followed for the planning and design of drainage works.
3. The principals of PNAP APP–105 should be observed for protecting the structure against penetration of moisture or water at the design stage.

PREPARATION WORKS :

1. Obtain the existing design drawings/ information for reference prior to the commencement of works.
2. Carry out condition survey of the parent structure/ existing condition prior to the commencement of works.
3. If the works would involve suspension of the drain system, inform the affected parties in advance.

SAFETY AND PRECAUTIONARY MEASURES

1. Fence–off the working area from the public. Diversion arrangement shall be taken if necessary.
2. Bamboo scaffolds details shall refer to the following figures as shown on drawing no. GN–1.
   - Figure 2 Truss–out bamboo scaffold
   - Figure 4 Working platform on a double–row bamboo scaffold

WORKING PROCEDURES

A. Erection

1. Install the pipe work and fitting as per drawing.
2. Water test the pipe works to make sure that the work is properly done.
3. Make good and reinstate the works area affected by the works.
4. Remove the bamboo scaffold and clean the site.
5. Any removed pipe works shall be sprayed with diluted bleaching agent (bleaching agent: water = 1:99) and pack into plastic bag for construction waste disposal.

B. Alteration

1. Install the pipe work and fitting as per drawing.
2. Water test the pipe works to make sure that the work is properly done.
3. Make good and reinstate the works area affected by the works.
4. Remove the bamboo scaffold and clean the site.
5. Any removed pipe works shall be sprayed with diluted bleaching agent (bleaching agent: water = 1:99) and pack into plastic bag for construction waste disposal.

C. Removal

1. Remove the pipe work and fitting as per drawing.
2. Make good and reinstate the works area affected by the works.
3. Remove the bamboo scaffold and clean the site.
4. Any removed pipe works shall be sprayed with diluted bleaching agent (bleaching agent: water = 1:99) and pack into plastic bag for construction waste disposal.

REMARKS :

1. This item excludes minor works item 3.23.
2. No pipeworks of residential premise shall protrude into the private premises of the floor below.
3. The nominal diameter of every soil pipe from water closet fitments or slop sinks shall be not less than the diameter of the outlet of any of the fitments it serves.
4. No water–borne piping will be embedded in structural elements, otherwise the guidelines in Appendix A of PNAP APP–105 should be followed for demonstration of the nil adverse effect to the performance of structural members.

MINOR WORKS ITEM 2.30	ERECTION, ALTERATION OR REMOVAL OF ABOVEGROUND DRAIN

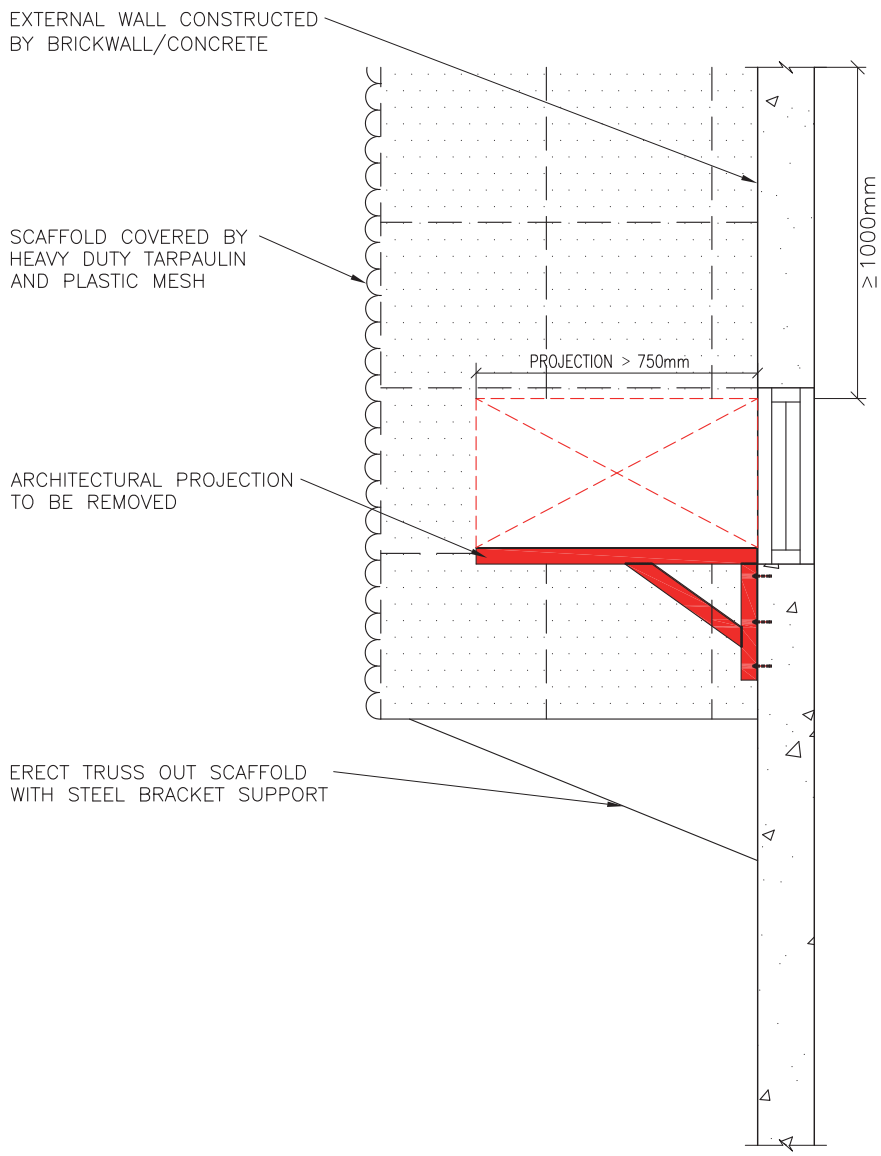

GENERAL NOTES :

The works carried out shall comply with the Buildings Ordinance and the provisions of other enactment. (Reference can be made to the examples listed in Sections 3 and 10 of the Guidelines.)

PREPARATION WORKS :

1. Temporarily stabilize some individual member using nylon rope if the members are considered not easy to handle.
2. Obtain the existing design drawings/ information for reference prior to the commencement of works.
3. Carry out condition survey of the parent structure/ existing condition prior to the commencement of works.
4. Inform the utilities company or sector if the works to be involved.
5. Works procedures should be submitted to the Buildings Department prior to the commencement of works

SAFETY AND PRECAUTIONARY MEASURES :

1. Fence–off the working area from the public. Diversion arrangement shall be taken if necessary.
2. Bamboo scaffolds details shall refer to the following figures as shown on drawing no. GN–1.
   - Figure 2 Truss–out bamboo scaffold
   - Figure 4 Working platform on a double–row bamboo scaffold
3. Reference shall be made to the "Guideline for the Removal of Typical Unauthorized Building Works and General Maintenance of External Walls" published by the Buildings Department.

WORKING PROCEDURES :

1. Remove the air conditioning unit and any associated air ducts or rack including all the associated cables, duct works and etc.
2. Remove the architectural projection, canopy, supporting frame using mechanical hand held tools to cut the members into pieces and collect into the main building access for construction waste disposal.
3. Make good and reinstate the affected areas of the parent building.
4. Dismantle the bamboo scaffold and clean the site.

Remarks: This case excludes items 13 or 14 of the Designated Exempted Works.

MINOR WORKS ITEM 2.31	**REMOVAL OF ARCHITECTURAL PROJECTION, CANOPY, SUPPORTING FRAME FOR AN AIR-CONDITIONING UNIT OR ASSOCIATED AIR DUCTS, OR RACK (OTHER THAN A DRYING RACK), PROJECTING FROM AN EXTERNAL WALL OF A BUILDING**

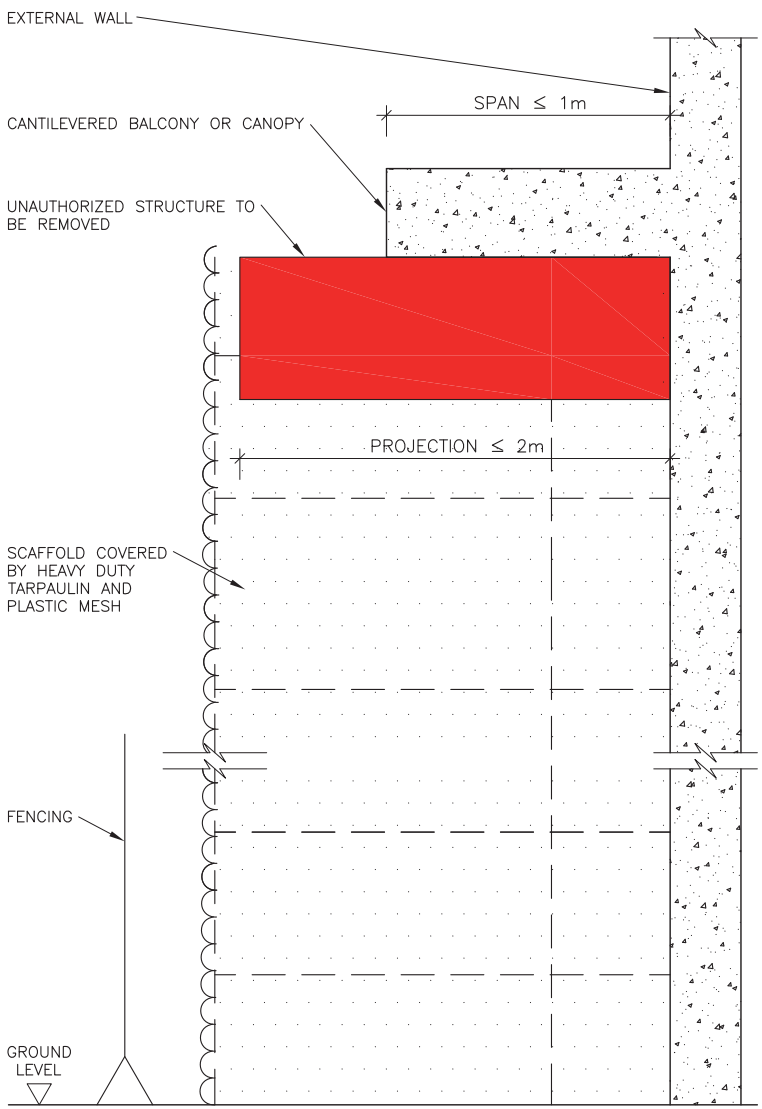

GENERAL NOTES :

1. The works carried out shall comply with the Buildings Ordinance and the provisions of other enactment. (Reference can be made to the examples listed in Sections 3 and 10 of the Guidelines.)

PREPARATION WORKS :

1. Obtain the existing design drawings / information for reference prior to the commencement of works.
2. Carry out condition survey of the parent structure/ existing condition prior to the commencement of works.
3. Obtain the original design of the approved structure for reference of any required reinstatement works.

SAFETY AND PRECAUTIONARY MEASURES :

1. Fence–off the working area from the public. Diversion arrangement shall be taken if necessary.
2. Bamboo scaffolds details shall refer to the following figure as shown on drawing no. GN–1.
   - Figure 4 Working platform on a double–row bamboo scaffold
3. Reference for removal of the unauthorized structures shall be made to the "Guidelines for the Removal of Typical Unauthorized Building Works and General Maintenance of External Walls" published by the Buildings Department.

WORKING PROCEDURES :

1. Demolish the structure using mechanical hand held tools.
2. The member of the unauthorized structure shall be cut into small pieces for construction waste disposal.
3. After removal of the unauthorized structure, make good and reinstate the affected areas of the parent building.
4. Remove the bamboo scaffold and clean the site.

MINOR WORKS ITEM 2.32	REMOVAL OF UNAUTHORIZED STRUCTURE (OTHER THAN AN ARCHITECTURAL PROJECTION, CANOPY, CANOPY, FRAME OR RACK) PROJECTING NOT MORE THAN 2M FROM THE EXTERNAL WALL OF A BUILDING

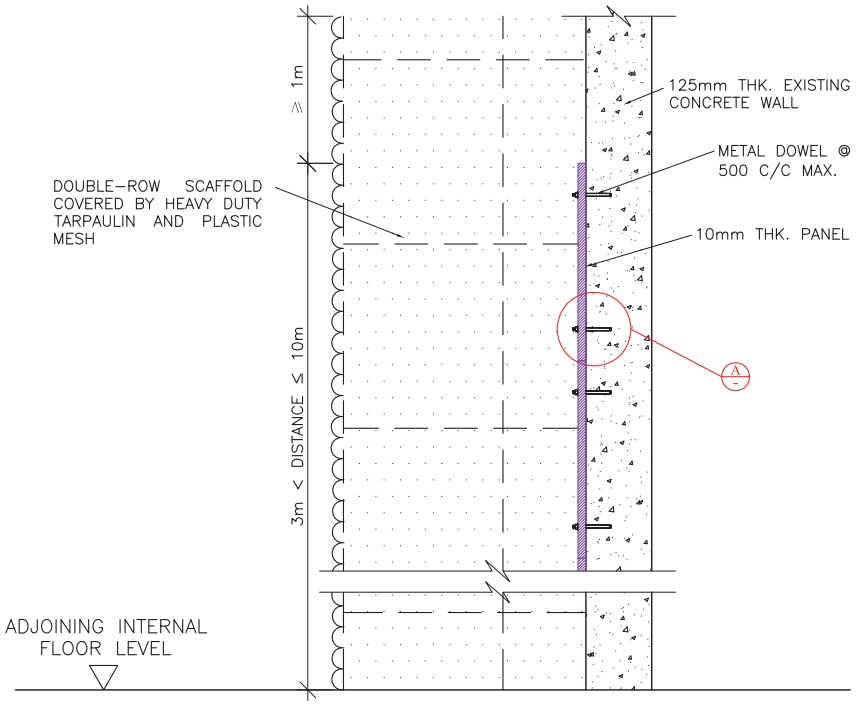

ERECTION

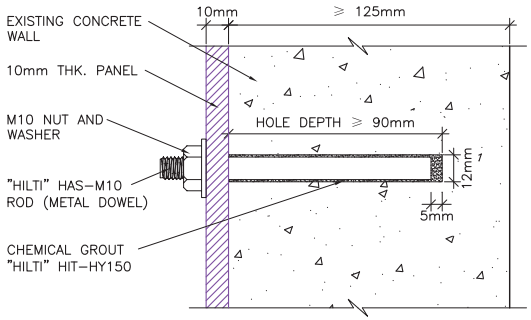

DETAIL A

GENERAL NOTES :

1. The works carried out shall comply with the Buildings Ordinance and the provisions of other enactment. (Reference can be made to the examples listed in Sections 3 and 10 of the Guidelines.)
2. All works shall comply with the following CoP/ standards:
   - Building (Construction) Regulations
   - Code of Practice for the Structural Use of Concrete 2004
3. All anchor bolts to be Hilti HAS M10 and shall be installed according to the manufacturer's specification.
4. Existing concrete grade of wall is assumed to be Grade 20 with a minimum thickness of 125mm.

DESIGN LOAD :

1. Dead Load = 0.25 kN/ Dowel

PREPARATION WORKS :

1. Obtain the existing design drawings/ information for reference prior to the commencement of works.
2. Carry out condition survey of the parent structure/ existing condition prior to the commencement of works.
3. Erection of bamboo scaffold shall be referred to the Typical Drawing and the "Guidelines for the Removal of Typical Unauthorized Building Works and General Maintenance of External Walls".
4. Obtain the original design of the approved structure for reference of any required reinstatement works.

SAFETY AND PRECAUTIONARY MEASURES :

1. Fence–off the working area from the public. Diversion arrangement shall be taken if necessary.
2. Bamboo scaffolds details shall refer to the following figure as shown on drawing no. GN–1.
   - Figure 1 Double–row bamboo scaffold and working platform over pavement
   - Figure 4 Working platform on a double–row bamboo scaffold

WORKING PROCEDURES :

A. Erection

1. Drill holes to the required depth and diameter and install the dowels in accordance with supplier's instruction.
2. Install the stone panel and fix the screws.
3. Make good and reinstate the affected areas of the parent building.
4. Dismantle the bamboo scaffold and clean the site.

B. Repair

1. Remove the screws and the broken stone panel.
2. Install the stone panel and fix the screws.
3. Make good and reinstate the affected areas of the parent building.
4. Dismantle the bamboo scaffold and clean the site.

C. Removal

1. Remove the screws and stone panel.
2. Use mechanical tools to hack off the concrete surrounding the screw to 50mm depth from the surface.
3. Use saw cut machine to cut off the dowel bars (the cut end should have a depth of at least 25mm from the concrete surface.)
4. Fill the screw holes by using waterproof cement mortar.
5. Make good and reinstate the affected areas of the parent building.
6. Dismantle the bamboo scaffold and clean the site.

MINOR WORKS ITEM 2.33	ERECTION, REPAIR OR REMOVAL OF PANEL FIXED BY METAL DOWELS AND FIXINGS ONTO A WALL INSIDE A BUILDING

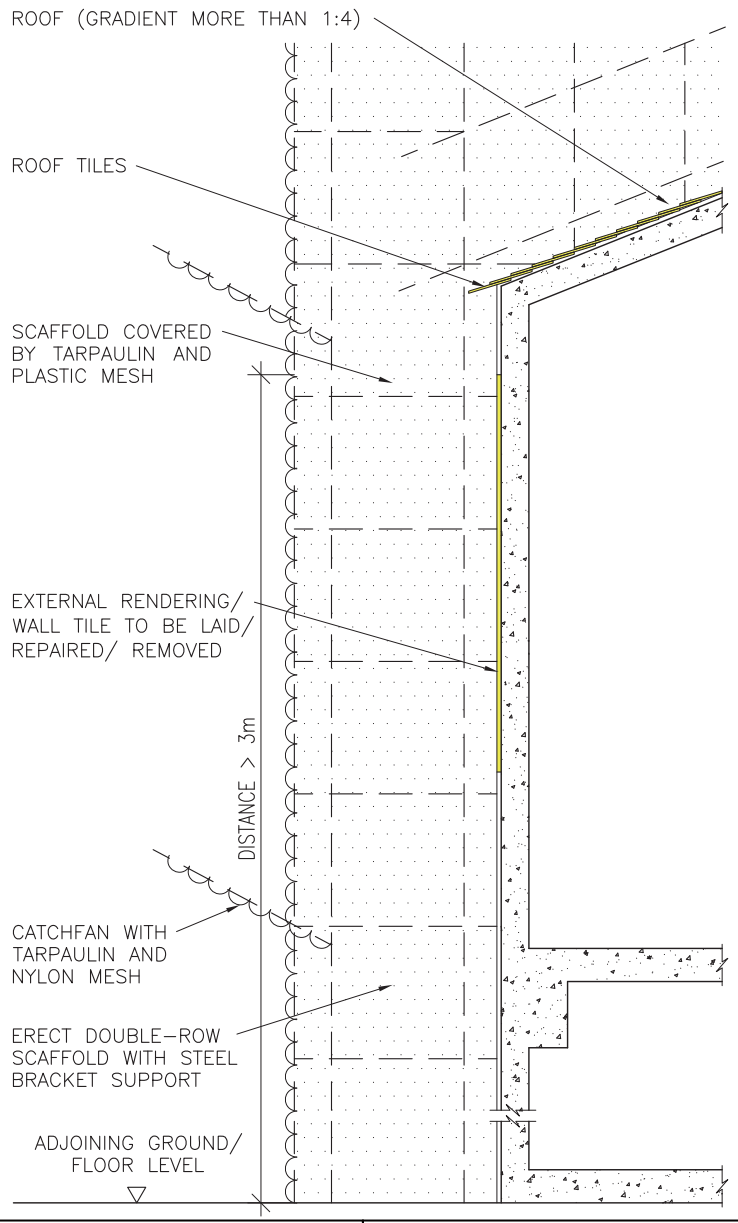

GENERAL NOTES :

The works carried out shall comply with the Buildings Ordinance and the provisions of other enactment. (Reference can be made to the examples listed in Sections 3 and 10 of the Guidelines.)

PREPARATION WORKS:

1. Normally, total thickness of external wall rendering should not exceed 20mm. Nevertheless, additional steel lathing for top up rendering will be required if the total thickness of rendering is more than 20mm but not exceeding 40mm.
2. Waterproof system at roof shall be reinstated according to the original design.
3. Carry out condition survey of the parent structure/ existing condition prior to the commencement of works.

SAFETY AND PRECAUTIONARY MEASURES :

1. Fence-off the working area from the public. Diversion arrangement shall be taken if necessary.
2. Bamboo scaffolds details shall refer to the following figures as shown on drawing no. GN-1.
   - Figure 1 Double-row bamboo scaffold and working platform over pavement
   - Figure 3 Typical detail for bamboo catchfan and screen cover
   - Figure 4 Working platform on a double-row bamboo scaffold
3. Covered walkway shall be provided for areas with passage when considered necessary.

WORKING PROCEDURES :

A) Rendering

a. Laying
   1. Apply spatterdash to the wall.
   2. Apply 20mm thick rendering (cement : sand = 1:3) to the wall.
   3. Make good and reinstate the affected areas of the parent building.
   4. Retrieve the construction waste for disposal.
   5. Dismantle the bamboo scaffold and clean the site.

b. Repair
   1. Carry out hammer tapping test to identify the loose/ defective areas.
   2. Use saw cutting machine to saw cut the edge of the render to be repaired and hack off such area using hand-held breaker and retrieve for construction waste disposal.
   3. Apply 20mm thick rendering (cement : sand = 1:3) to the wall.
   4. Make good and reinstate the affected areas of the parent building.
   5. Arrange construction waste disposal.
   6. Dismantle the bamboo scaffold and clean the site.

c. Removal
   1. Use saw cutting machine to saw cut the edge of the rendering area to be removed.
   2. Hack off such area using hand-held breaker and retrieve for construction waste disposal.
   3. Make good and reinstate the affected areas of the parent building.
   4. Arrange construction waste disposal.
   5. Dismantle the bamboo scaffold and clean the site.

B) Wall tile or roof tile

a. Laying
   1. Apply rendering as per A.a.
   2. Soak the tiles into water for at least 24 hours before installation.
   3. Use cement slurry as the adhesive to adhere tiles to the rendering (thickness of cement slurry should be less than 3mm).
   4. Use cement slurry (cement : sand = 1:3) as grout filler to fill up the joints between tiles.
   5. Make good and reinstate the affected areas of the parent building.
   6. Retrieve the construction waste for disposal.
   7. Dismantle the bamboo scaffold and clean the site.

b. Repair
   1. Carry out hammer tapping test to identify the defective tile areas with hollow sound.
   2. Remove tile or rendering as per B.c or A.c respectively.
   3. Carry out items B.a.1 to B.a.7 for the rest of the works.

c. Removal
   1. Use saw cutting machine to cut off the edge of the tiling area to be removed.
   2. Use hand-held mechanical breaker to remove the tile and retrieve for construction waste disposal.
   3. Make good and reinstate the affected areas of the parent building.
   4. Dismantle the bamboo scaffold and clean the site.

MINOR WORKS ITEM 2.34	LAYING, REPAIRING OR REMOVAL OF EXTERNAL RENDING, EXTERNAL WALL TILE OR ROOF TILE OF A BUILDING

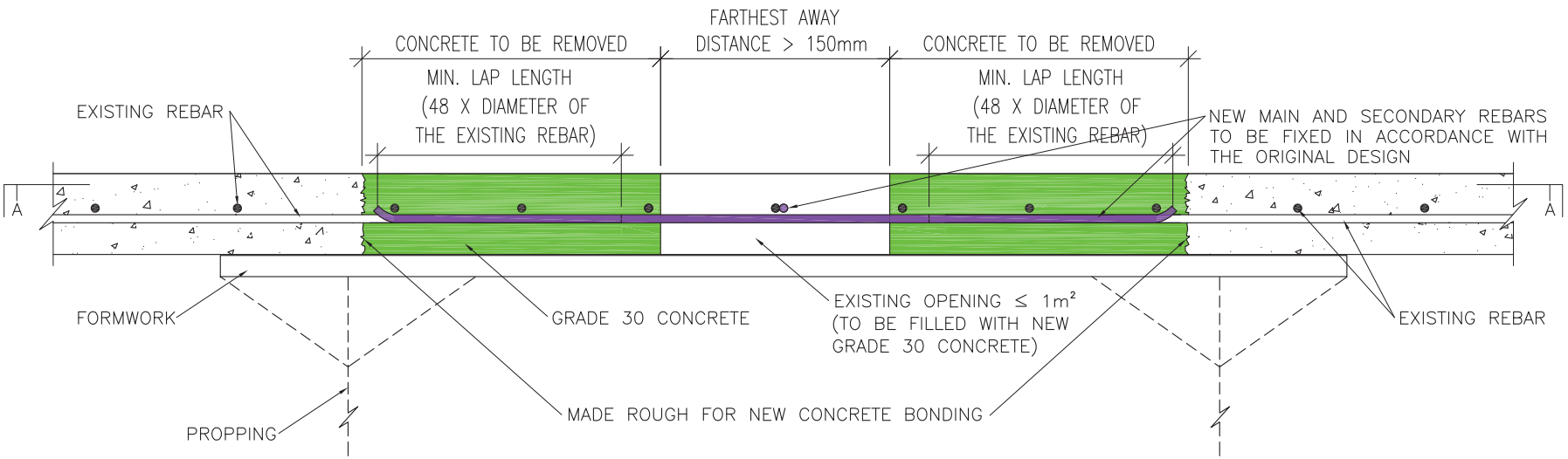

GENERAL NOTES :

1. The works carried out shall comply with the Buildings Ordinance and the provisions of other enactment. (Reference can be made to the examples listed in Sections 3 and 10 of the Guidelines.)
2. All works shall comply with the following CoP/ standards:
   - Building (Construction) Regulations
   - Code of Practice for the Structural Use of Concrete 2004
3. All concrete works shall comply with CS1.
4. Concrete grade and the minimum cover shall be grade 30 and 25 mm respectively.
5. Steel reinforcement to be high yield type II deformed bar with the characteristic strength of 460 N/mm² and comply with CS2:1995.
6. Minimum anchorage and lap length are 48 x diameter of the existing rebar unless otherwise specified.
7. Minimum FRP for the slab to be reinstated = 1 hr unless otherwise specified.

PREPARATION WORKS :

1. Obtain the existing design drawings/ information for reference prior to the commencement of works.
2. Carry out condition survey of the parent structure/ existing condition prior to the commencement of works.

SAFETY AND PRECAUTIONARY MEASURES :

1. Fence–off the working area from the public. Diversion arrangement shall be taken if necessary.
2. Prior to the commencement of works, the contractor is recommended to refer to Section 4 (Method of Demolition) of the Code of Practice for Demolition of Buildings for details of works.
3. Erect steel proppings as temporary support as per the manufacturers' instructions.

WORKING PROCEDURES :

1. Break–off the existing concrete slab into small piece using mechanical hand–held tools to expose the reinforcing bars for lapping.
2. Fix the new reinforcing bars with the designed lapping distance.
3. Pour concrete after erect formwork and proppings.
4. 28 days after concrete casting, remove the formwork and the proppings.
5. Arrange construction waste disposal.
6. Make good and reinstate the affected areas of the parent structure and clean the site.

MINOR WORKS ITEM 2.35	REINSTATEMENT IN ACCORDANCE WITH THE ORIGINAL DESIGN OF A SLAB IN RESPECT OF WHICH AN OPENING HAS BEEN FORMED	SHEET 1 OF 2

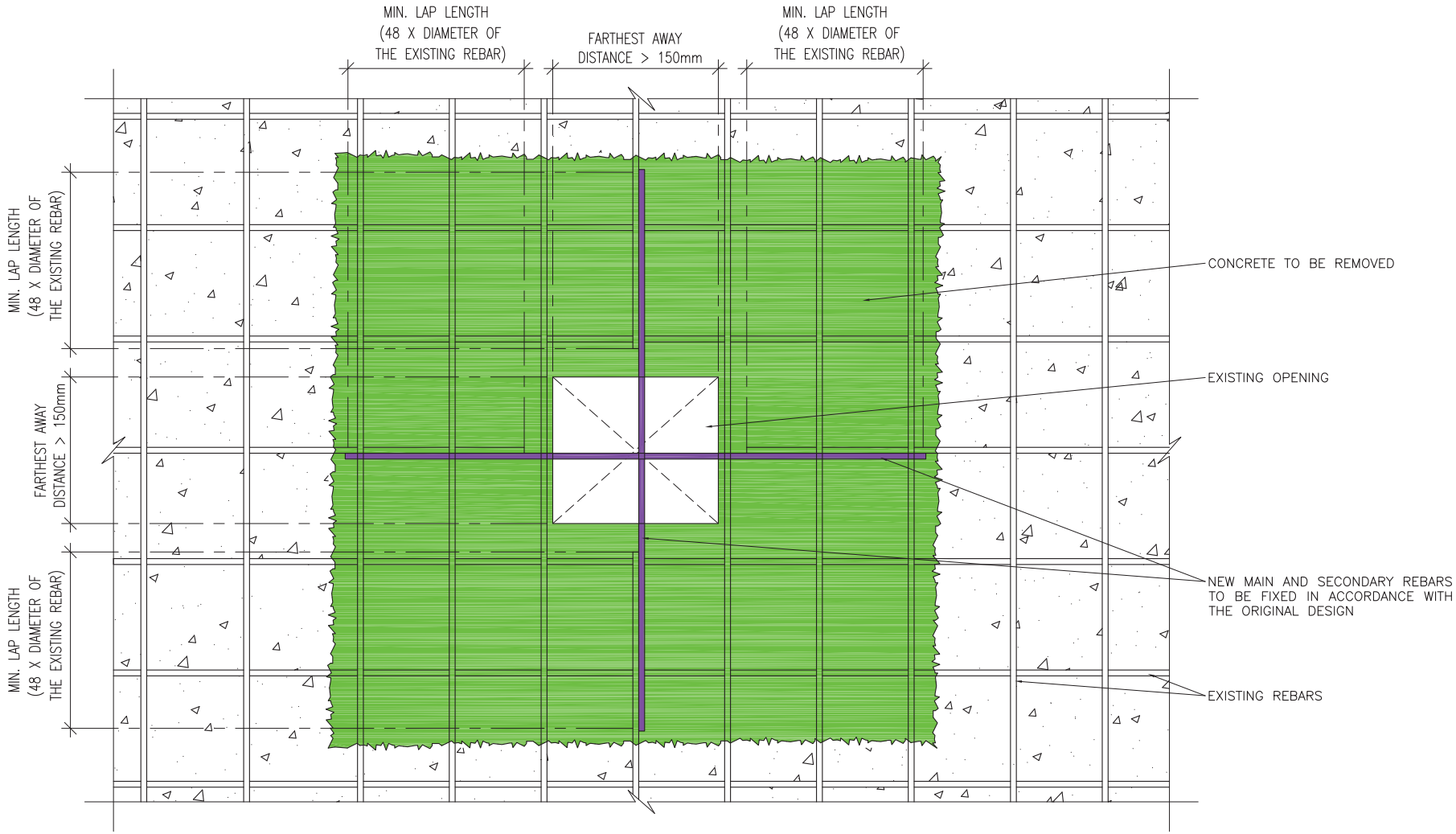

SECTION A–A

MINOR WORKS ITEM 2.35	REINSTATEMENT IN ACCORDANCE WITH THE ORIGINAL DESIGN OF A SLAB IN RESPECT OF WHICH AN OPENING HAS BEEN FORMED	SHEET 2 OF 2

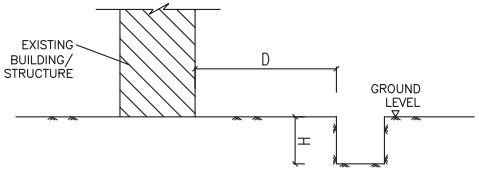

H≤ 1.5m, D≥ H

CONDITIONAL DIAGRAM 1

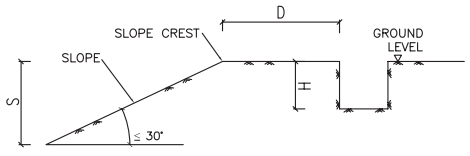

H≤ 1.5m, D≥ S

CONDITIONAL DIAGRAM 2

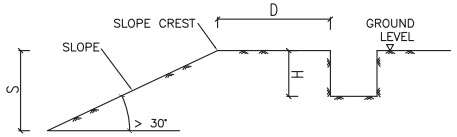

H≤ 1.5m, S≤3m, D≥1.5S

CONDITIONAL DIAGRAM 3

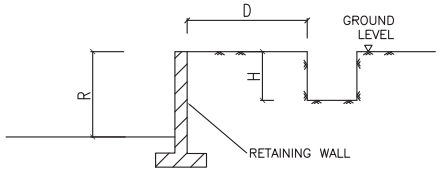

H≤ 1.5m, R≤3m, D≥1.5R

CONDITIONAL DIAGRAM 4

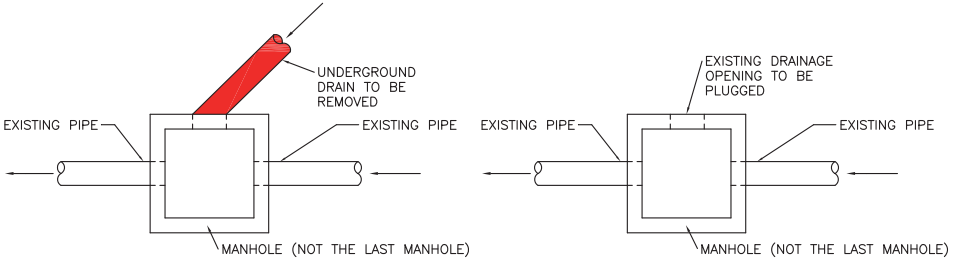

BEFORE

AFTER

PLAN OF MANHOLE

REMOVAL OF UNDERGROUND DRAIN

GENERAL NOTES :

The works carried out shall comply with the Buildings Ordinance and the provisions of other enactment. (Reference can be made to the examples listed in Sections 3 and 10 of the Guidelines.)

PREPARATION WORKS:

1. Obtain and investigate all underground utilities drawings/ information prior to the commencement of works.
2. Obtain the existing design drawing/ information for reference prior to the commencement of works.
3. Carry out condition survey of the adjoining structure/ existing condition prior to the commencement works.
4. If the works would involve suspension of the drain system, inform the affected parties in advance.

SAFETY AND PRECAUTIONARY MEASURES :

1. Fence–off the working area from the public. Diversion arrangement shall be taken if necessary.
2. Shoring support is required if the depth of trench more than 1.2m. Erection method shall be referred to "Guide to Trench Excavations" published by Utilities Technical Liaison Committee – Highways Department and Geotechnical Engineering Office – Civil Engineering Department (February 2003)
   a) The sizes of the structural members (e.g timber boards, struts and walings) and the spacings between struts depend on the actual excavation depth, ground conditions and other factors affecting the loading on the shoring system.
   b) Half timber board shoring may be adequate for moderately form to firm soil provided that the groundwater level is below the bottom of the trench.

WORKING PROCEDURES :

1. Carry out excavation and backfilling work in accordance with minor works item 2.11.
2. Remove the pipework as per drawing.
3. Plug the opening in the manhole with water proof cement mortar.
4. Any removed pipe works shall be sprayed with diluted bleaching agent (Bleaching agent: water = 1:99) and pack into plastic bag for construction waste disposal.
5. Carry out water test to the manhole for any leakage.
6. Backfilling and reinstate the top surface.

Remarks: This works excludes excavation within area number 1 or 3 of the scheduled areas.

MINOR WORKS ITEM 2.36	REMOVAL OF UNDERGROUND DRAIN

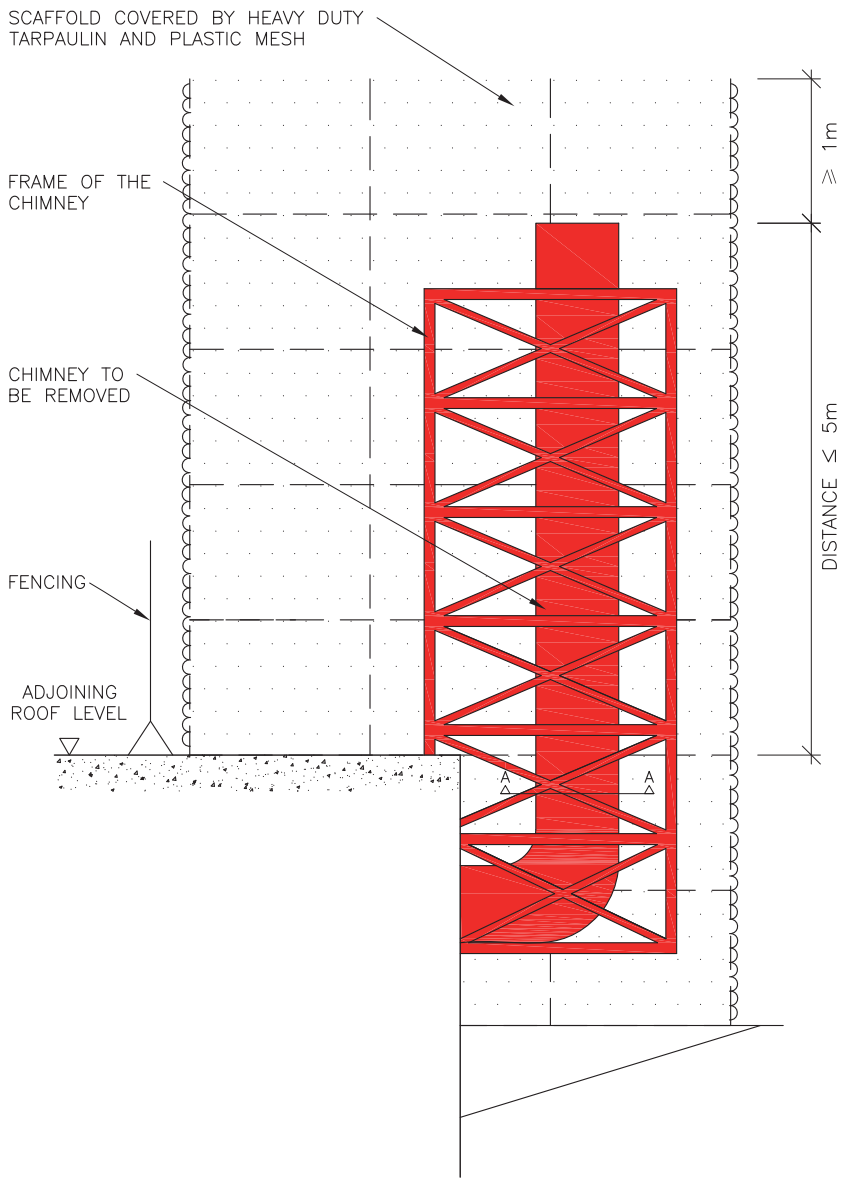

GENERAL NOTES :

The works carried out shall comply with the Buildings Ordinance and the provisions of other enactment. (Reference can be made to the examples listed in Sections 3 and 10 of the Guidelines.)

PREPARATION WORKS :

1. Obtain the existing design drawings/ information for reference prior to the commencement of works.
2. Inform the utilities company or sector if the works to be involved.
3. Carry out condition survey of the parent structure/ existing condition prior to the commencement of works.
4. Asbesto investigation works/ removal works shall be carried out by specialist contractor prior to any removal works.
5. Obtain the original design of the approved structure for reference of any required reinstatement works.
6. The contractor is required to submit his working procedure to the Buildings Authority prior to the commencement of works.

SAFETY AND PRECAUTIONARY MEASURES :

1. Fence–off the working area from the public.
2. No accumulation of demolished parts should be stored on roof.
3. Bamboo scaffolds details shall refer to the following figures as shown on drawing no. GN–1.
   - Figure 2 Truss–out bamboo scaffold
   - Figure 4 Working platform on a double–row bamboo scaffold

WORKING PROCEDURES :

1. Cut down the chimney pipe in small manageable size. The sequence of demolition shall be from top to bottom.
2. Debris from removal works should be put into bags for construction waste disposal.
3. Make good and reinstate the affected areas (including waterproofing) of the parent building.
4. Dismantle the bamboo scaffold and clean the site.

SMALLEST CROSS–SECTIONAL DIMENSION ≤ 500mm

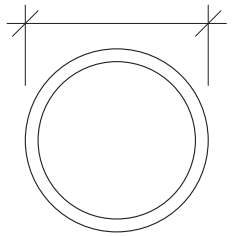

SECTION A–A

MINOR WORKS ITEM 2.37	REMOVAL OF CHIMNEY ATTACHED TO THE EXTERNAL WALL OF A BUILDING OR LOCATED ON THE ROOF OF A BUILDING

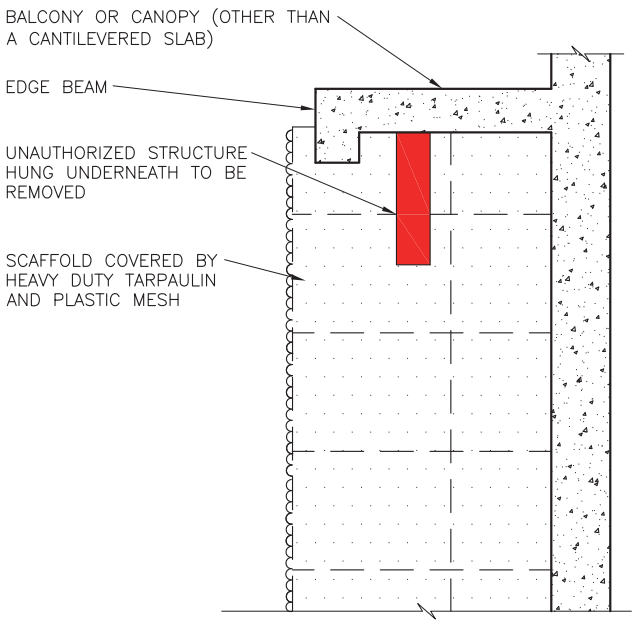

HUNG UNDERNEATH THE SOFFIT OF A BALCONY OR CANOPY

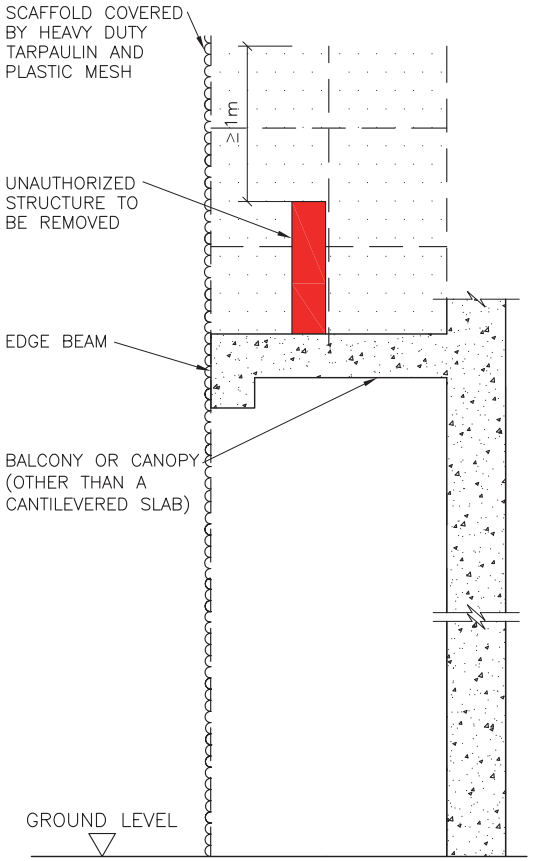

FIXED TO A BALCONY OR CANOPY

GENERAL NOTES :

The works carried out shall comply with the Buildings Ordinance and the provisions of other enactment. (Reference can be made to the examples listed in Sections 3 and 10 of the Guidelines.

PREPARATION WORKS :

1. Obtain the existing design drawings/ information for reference prior to the commencement of works.
2. Carry out condition survey of the parent structure/ existing condition prior to the commencement of works.
3. Obtain the original design of the approved structure for reference of any required reinstatement works.

SAFETY AND PRECAUTIONARY MEASURES :

1. Fence–off the working area from the public. Diversion arrangement shall be taken if necessary.
2. Bamboo scaffolds details shall refer to the following figures as shown on drawing no. GN–1.
   - Figure 1 Double row bamboo scaffold and working platform over pavement
   - Figure 4 Working platform on a double–row bamboo scaffold
3. Reference for removal of the unauthorized structures shall be made to the "Guidelines for the Removal of Typical Unauthorized Building Works and General Maintenance of External Walls" published by the Buildings Department.

WORKING PROCEDURES :

1. Demolish the structure by mechanical hand held tools.
2. The member of the unauthorized structure shall be cut into small pieces for construction waste disposal.
3. After removal of the unauthorized structure, make good and reinstate the affected areas of the parent building.
4. Dismantle bamboo scaffold and clean the work areas.

MINOR WORKS ITEM 2.38	REMOVAL OF UNAUTHORIZED STRUCTURE HUNG UNDERNEATH THE SOFFIT OF A BALCONY OR CANOPY (OTHER THAN A CANTILEVERED SLAB) OR FIXED TO A CANOPY (OTHER THAN A CANTILEVERED SLAB)

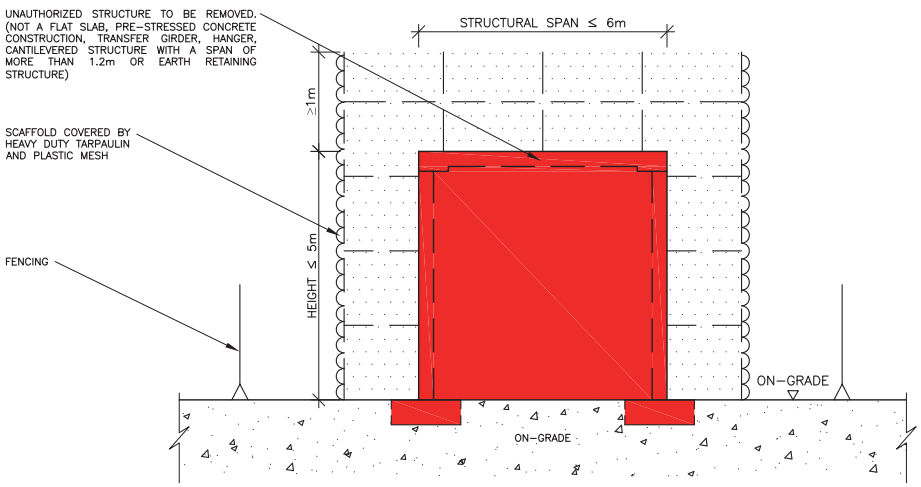

CASE 1: ON-GRADE

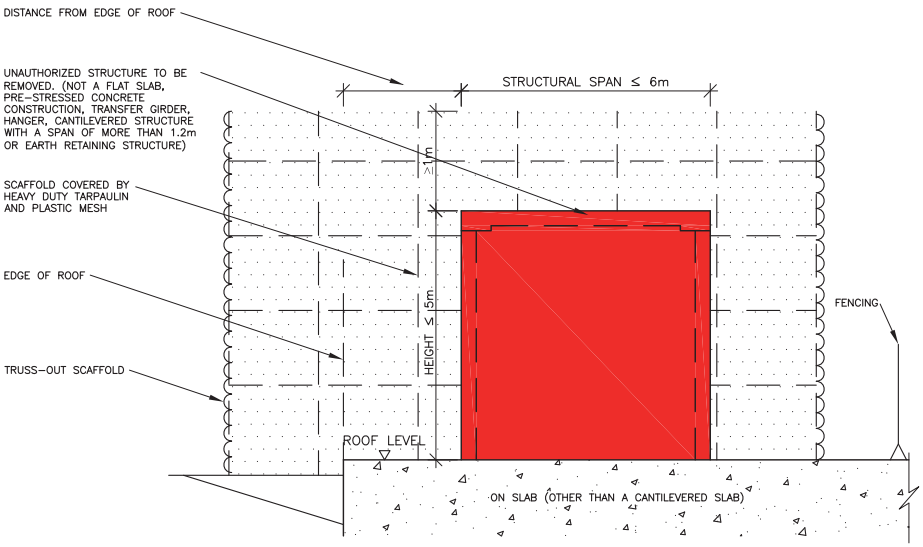

CASE 2: ON SLAB (OTHER THAN A CANTILEVERED SLAB)

GENERAL NOTES :

The works carried out shall comply with the Buildings Ordinance and the provisions of other enactment. (Reference can be made to the examples listed in Sections 3 and 10 of the Guidelines.)

PREPARATION WORKS :

1. Obtain the existing design drawings/ information for reference prior to the commencement of works.
2. Carry out condition survey of the parent structure/ existing condition prior to the commencement of works.
3. Obtain the original design of the approved structure for reference of any required reinstatement works.

SAFETY AND PRECAUTIONARY MEASURES :

1. Fence-off the working area from the public. Diversion arrangement shall be taken if necessary.
2. Bamboo scaffolds details shall refer to the following figures as shown on drawing no. GN-1.
   - Figure 2 Truss-out bamboo scaffold
   - Figure 4 Working platform on a double-row bamboo scaffold
3. No accumulation of demolished parts should be stored on roof.
4. Reference for removal of unauthorized structures shall be made to "Guidelines for the Removal of Typical Unauthorized Building Works and General Maintenance of External Walls" published by the Buildings Department.

WORKING PROCEDURES :

1. Remove all loose features inside the unauthorized building structures prior to the demolition of walls.
2. Demolish the unauthorized building structure from top to bottom. All structure shall be cut to a manageable size (i.e 300mm x 300mm).
3. Make good and reinstate the affected areas (including waterproofing layer) of the building.
4. Dismantle the bamboo scaffold and clean the site.

Remark : This case excludes minor works item 3.32.

MINOR WORKS ITEM 2.39	REMOVAL OF UNAUTHORIZED SINGLE STOREY STRUCTURE LOCATED ON-GRADE OR ON A SLAB (OTHER THAN A CANTILEVERED SLAB)

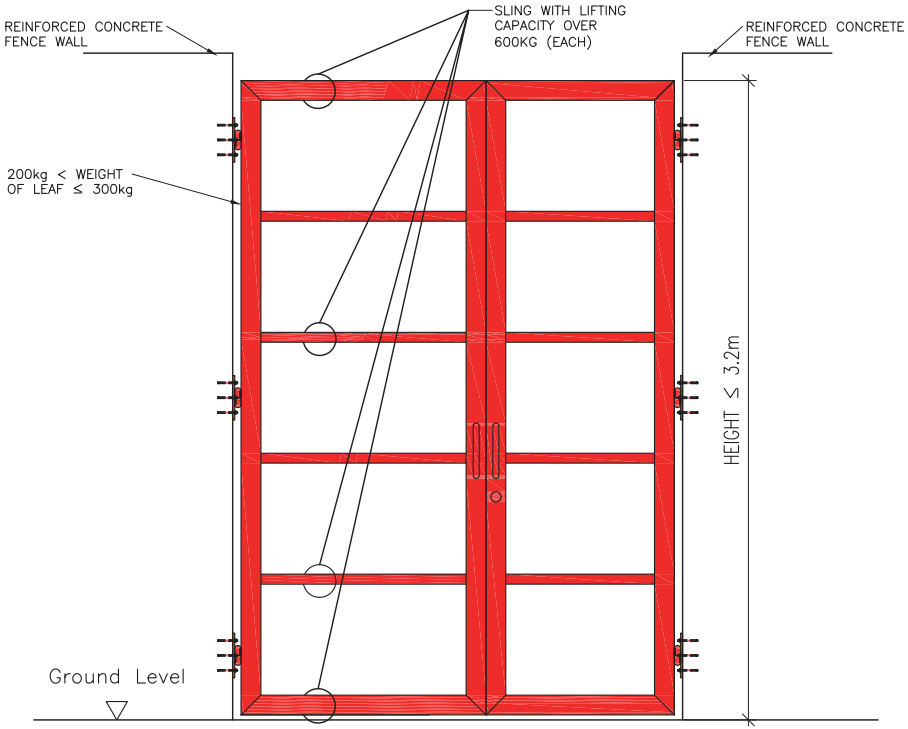

GENERAL NOTES :

1. The works carried out shall comply with the Buildings Ordinance and the provisions of other enactment. (Reference can be made to the examples listed in Sections 3 and 10 of the Guidelines.)

PREPARATION WORKS :

1. Obtain the existing design drawings / information of the metal gate for reference.
2. Carry out condition survey of the parent structure/ existing condition prior to the commencement of works.
3. Obtain the original design of the approved structure for reference of any required reinstatement works.
4. Disconnect the electric locking device (if any) prior to the commencement of work.

SAFETY AND PRECAUTIONARY MEASURES :

1. Fence–off the working area from the public. Diversion arrangement shall be taken if necessary.
2. The use of lifting device shall be in accordance with relevant Code of Practice/ Guidance Notes issued by the Labour Department.

WORKING PROCEDURES :

1. Use of proper lifting device with slings to secure the gate.
2. Cut off the hinges connected to the metal gate.
3. Lower the metal gate onto floor horizontally.
4. Cut the metal gate into manageably small size and remove off site for construction waste disposal.
5. Make good and reinstate the affected area.

MINOR WORKS ITEM 2.40	REMOVAL OF METAL GATE AT A FENCE WALL OR AT AN ENTRANCE TO A BUILDING

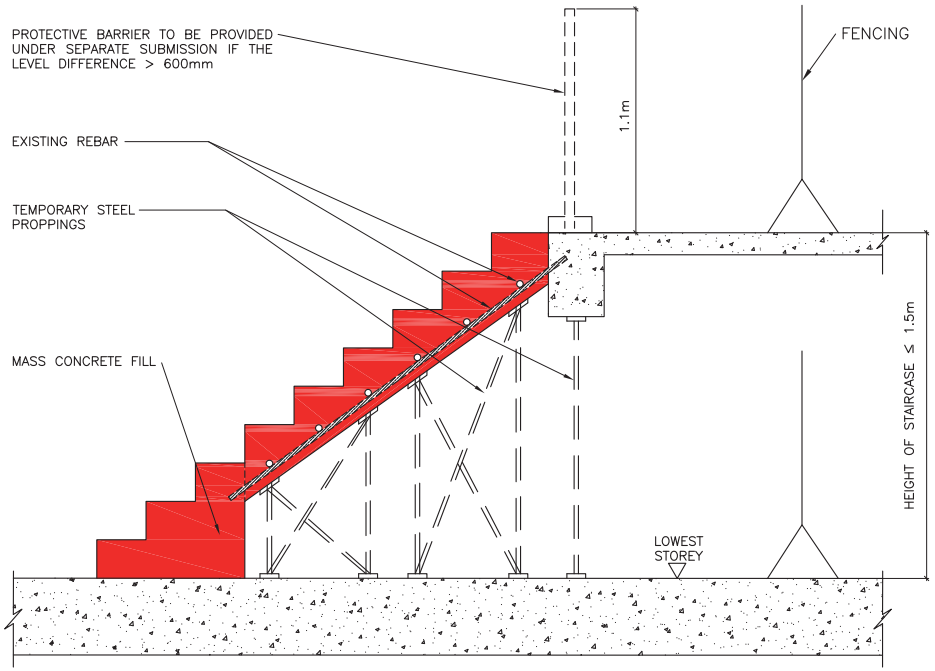

SECTION

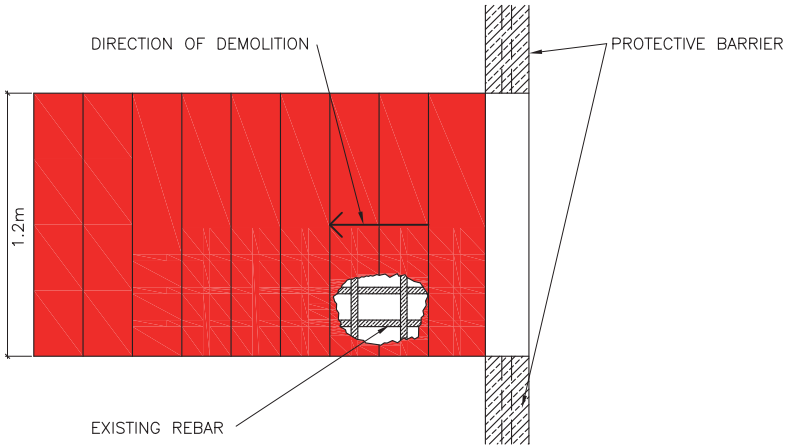

PLAN

GENERAL NOTES :

The works carried out shall comply with the Buildings Ordinance and the provisions of other enactment. (Reference can be made to the examples listed in Sections 3 and 10 of the Guidelines.)

PREPARATION WORKS :

1. Obtain the existing design drawings/ information of the staircase for reference.
2. Carry out condition survey of the parent structure/ existing condition prior to the commencement of works.

SAFETY AND PRECAUTIONARY MEASURES :

1. Fence–off the working area from the public. Diversion arrangement shall be taken if necessary.
2. Prior to the commencement of works, the contractor is recommended to refer to Section 4 (Method of Demolition) of the Code of Practice for Demolition of Buildings for details of works.
3. Erect steel proppings as temporary support as per the manufacturers' instructions.

WORKING PROCEDURES :

A. Removal of the reinforced concrete staircase

1. Break down the concrete top down into small piece using mechanical hand–held tools to expose the reinforcing bars.
2. Cut the exposed reinforcement.
3. Repeat the above steps 1 and 2 until complete removal of the reinforced concrete staircase.
4. Arrange construction waste disposal.

B. Removal of the mass concrete portion of the staircase

1. Break down the mass concrete into small pieces.
2. Arrange construction waste disposal.
3. Make good and reinstate the affected areas of the parent structure.

MINOR WORKS ITEM 3.1	REMOVAL OF THE WHOLE OF INTERNAL STAIRCASE ON THE LOWEST STOREY OF A BUILDING THAT IS NOT USED AS A MEANS OF ESCAPE OR A MEANS OF ACCESS FOR FIREFIGHTING AND RESCUE

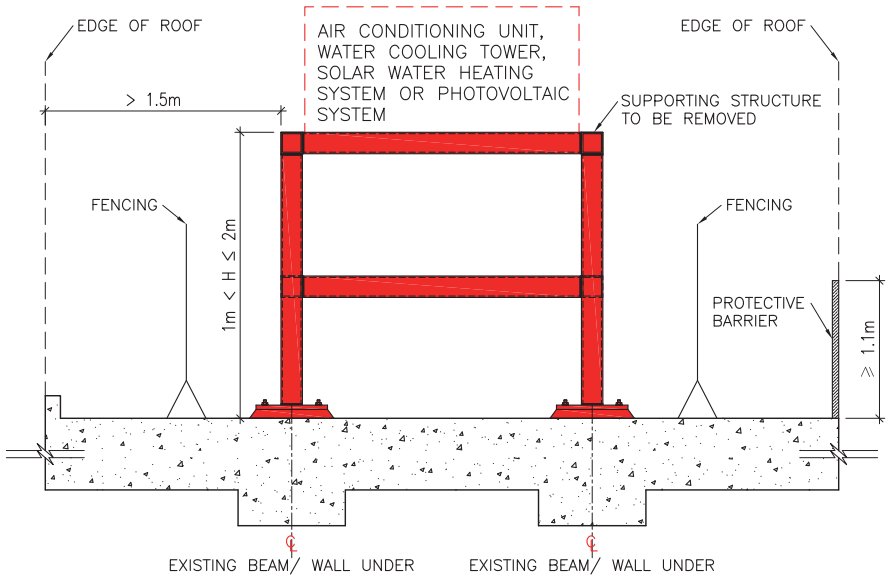

ON ROOF OR SLAB(OTHER THAN A CANTILEVERED SLAB)

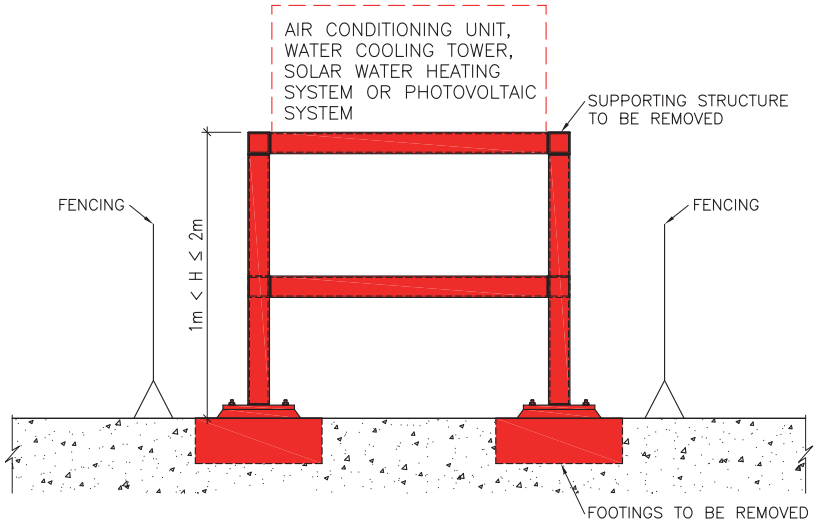

ON–GRADE

GENERAL NOTES :

1. The works carried out shall comply with the Buildings Ordinance and the provisions of other enactment. (Reference can be made to the examples listed in Sections 3 and 10 of the Guidelines.)

PREPARATION :

1. Obtain the original design drawings/ information for reference prior to the commencement of works.
2. Check structural adequacy of the parent structure/ existing condition prior to the commencement of works.
3. Obtain the original deign of the approved structure for reference of any required reinstatement works.

SAFETY AND PRECAUTIONARY MEASURES :

1. Fence–off the working area from the public. Diversion arrangement shall be taken if necessary.

WORKING PROCEDURES :

1. Remove the existing air–conditioning unit, water cooling tower, solar heating system, photovoltaic system or any associated duct works if necessary. (Ensure all water pipes and electrical cable or wires have been disconnected prior to any removal works.)
2. Cut the supporting structure into manageable size by hand–held tools or machine and retrieve for construction waste disposal.
3. Make good and reinstate the affected areas (including waterproofing) where necessary.

REMOVAL OF FOOTINGS (FOR ON–GRADE SITUATION) :

1. Carry out excavation and backfilling work in accordance with minor works item 2.11.
2. Break down the concrete footings into small pieces for construction waste disposal.
3. Backfill and reinstate the top surface.

MINOR WORKS ITEM 3.2	REMOVAL OF SUPPORTING STRUCTURE FOR AN AIR-CONDITIONING UNIT, WATER COOLING TOWER, SOLAR WATER HEATING SYSTEM OR PHOTOVOLTAIC SYSTEM

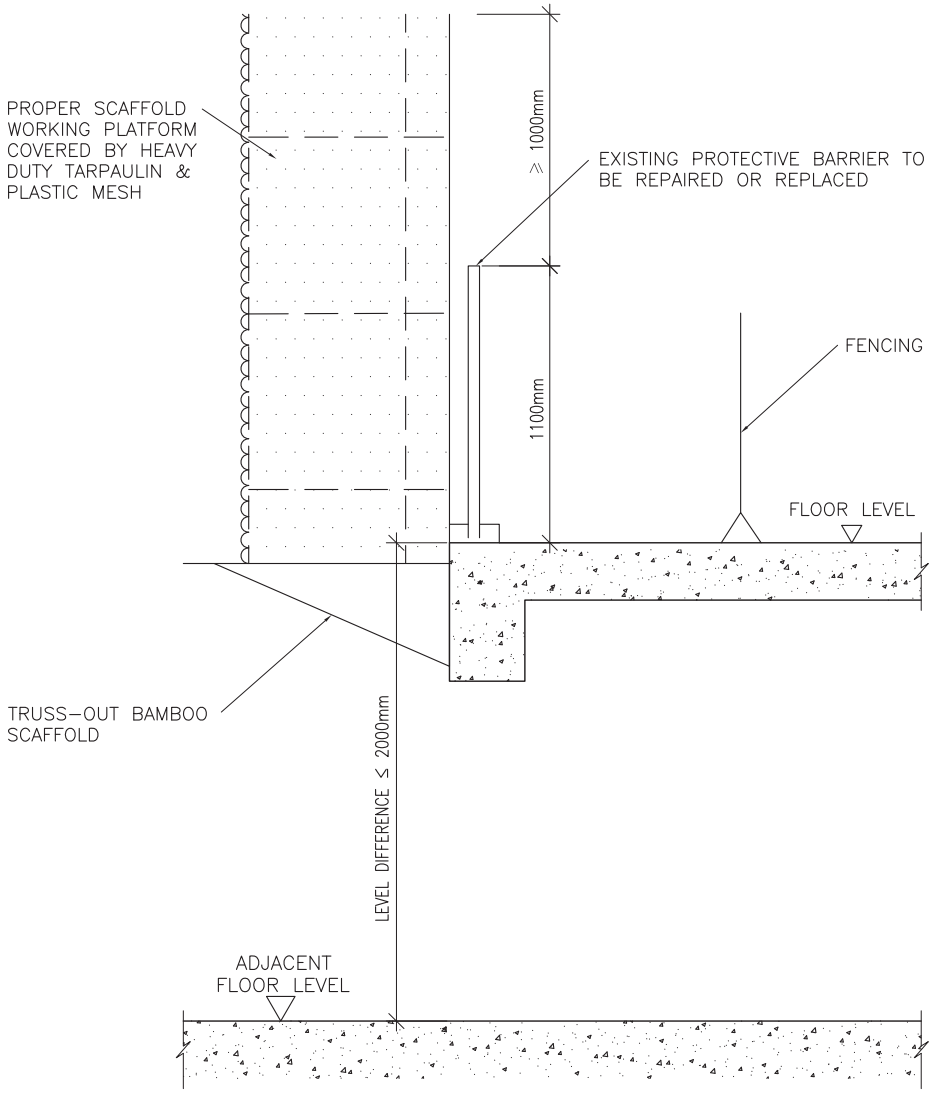

GENERAL NOTES :

The works carried out shall comply with the Buildings Ordinance and the provisions of other enactment. (Reference can be made to the examples listed in Sections 3 and 10 of the Guidelines.)

PREPARATION WORKS :

1. Obtain the original design drawings/ information for reference prior to the commencement of works
2. Carry condition survey of the parent structure/ existing condition prior to the commencement of works.

SAFETY AND PRECAUTIONARY MEASURES :

1. Fence-off the working area from the public. Diversion arrangement shall be taken if necessary.
2. Bamboo scaffolds details shall refer to the following figure as shown on drawing no. GN-1.
   - Figure 2 Truss-out bamboo scaffold

WORKING PROCEDURES :

A. Repair

1. Remove the defective member of the protective barrier and replace with a new one in accordance with the original design.
2. Make good and reinstate the affected areas of the parent structure.
3. Remove the bamboo scaffold and clean the site.
4. All rubbish generated shall be disposed as construction waste.

B. Replacement

1. Remove the protective barrier.
2. Reinstall the protective barrier in accordance with the original design.
3. Make good and reinstate the affected areas of the parent structure.
4. Remove the bamboo scaffold and clean the site.
5. All rubbish generated shall be disposed as construction waste.

MINOR WORKS ITEM 3.3	REPAIR OF REPLACEMENT OF PROTECTIVE BARRIER (OTHER THAN AN EXTERNAL REINFORCED CONCRETE WALL OR BLOCK WALL) IN ACCORDANCE WITH THE ORIGINAL DESIGN

GENERAL NOTES :

The works carried out shall comply with the Buildings Ordinance and the provisions of other enactment. (Reference can be made to the examples listed in Sections 3 and 10 of the Guidelines.)

PREPARATION WORKS :

1. Obtain the existing design drawings / information for reference prior to the commencement of works.
2. Carry out condition survey of the parent structure/ existing condition prior to the commencement of works.

SAFETY AND PRECAUTIONARY MEASURES :

1. Fence–off the working area from the public. Diversion arrangement shall be taken if necessary.
2. Bamboo scaffolds details shall refer to the following figure as shown on drawing no. GN–1.
   - Figure 4 Working platform on a double–row bamboo scaffold
3. Reference shall be made to Code of Demolition 2004 published by the Buildings Department.

WORKING PROCEDURES :

1. The wall shall be removed from top to bottom.
2. The contractor may refer to Figure 4.7 from Code of Practice for Demolition Works as appropriate.
3. The wall shall be broken down into small pieces for construction waste disposal.
4. Make good and reinstate the affected area of the parent structure.
5. Dismantle the bamboo scaffold and clean the site.

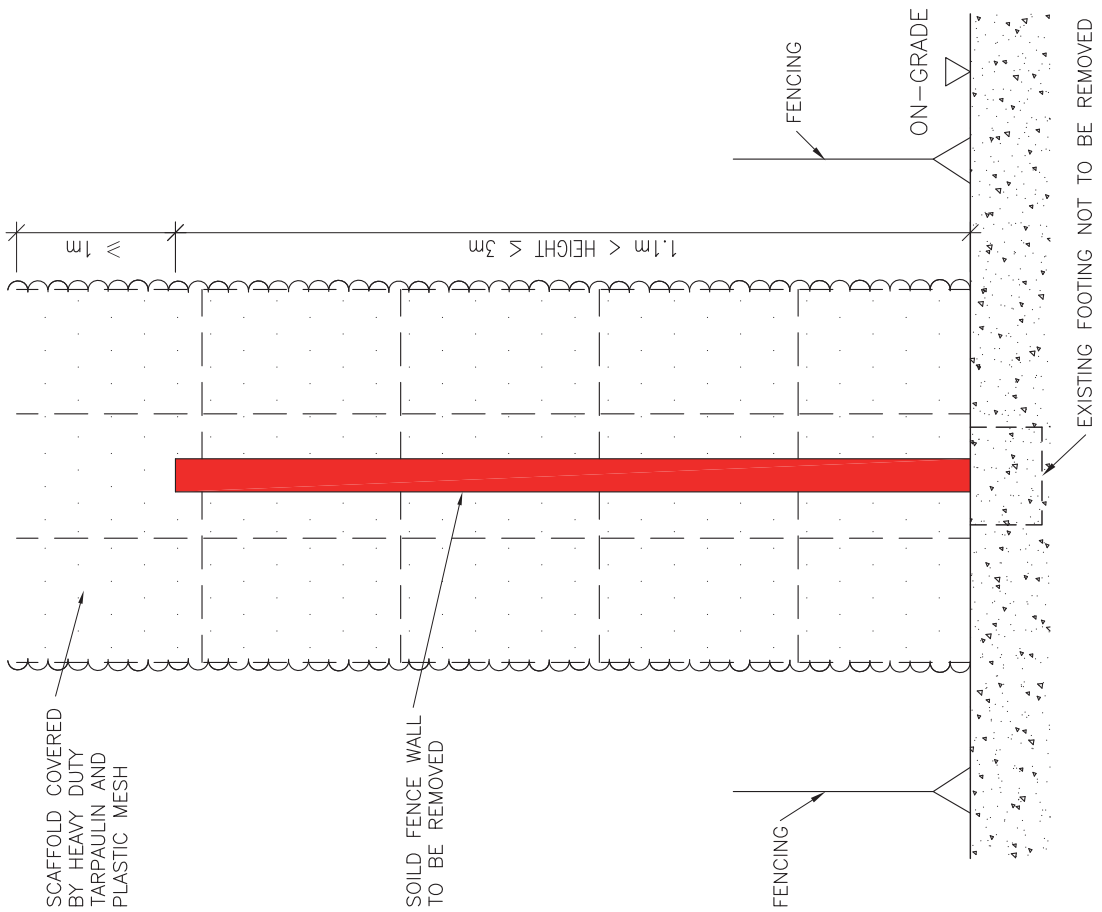

REMOVAL OF SOLID FENCE WALL

MINOR WORKS ITEM 3.4

2010/10

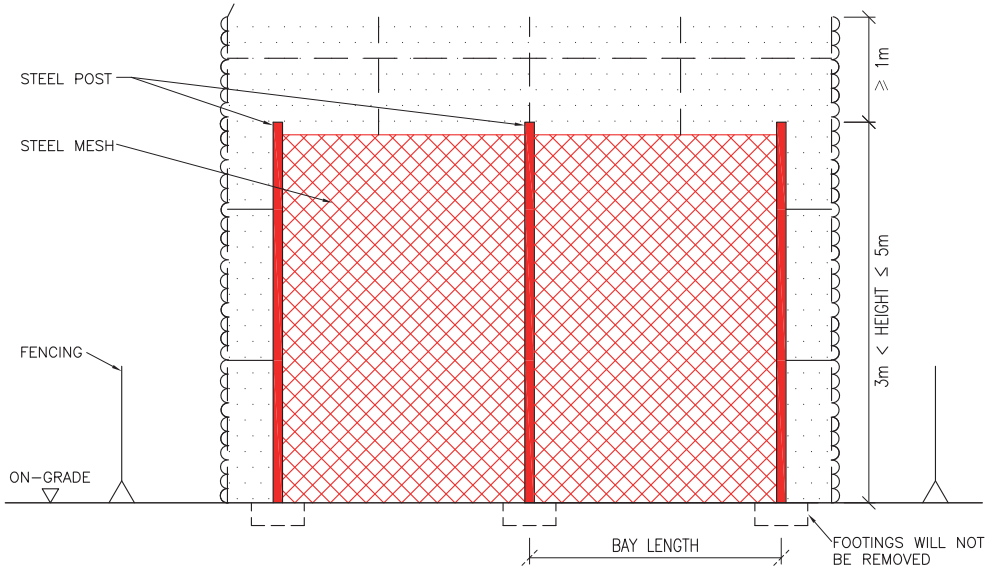

ELEVATION

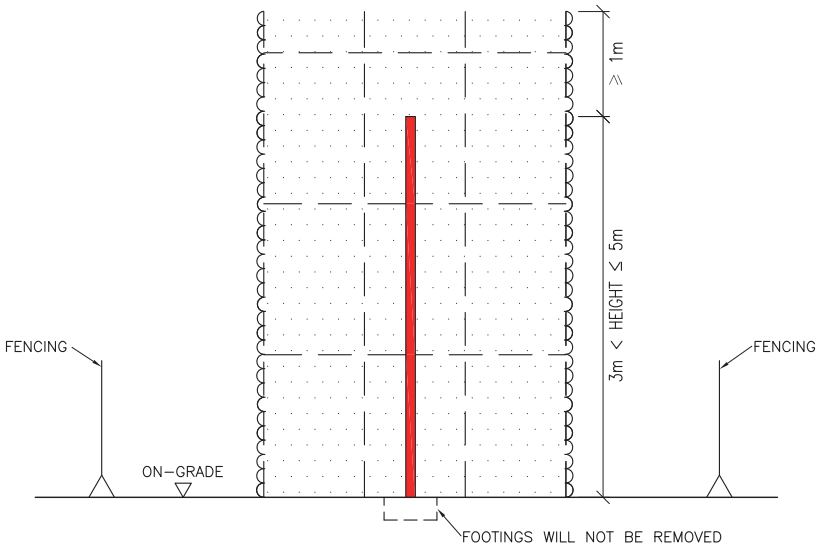

SECTION

GENERAL NOTES :

The works carried out shall comply with the Buildings Ordinance and the provisions of other enactment. (Reference can be made to the examples listed in Sections 3 and 10 of the Guidelines.)

PREPARATION WORKS :

1. Obtain the existing design drawings/ information for reference prior to the commencement of works.
2. Carry out condition survey of the parent structure/ existing condition prior to the commencement of works.

SAFETY AND PRECAUTIONARY MEASURES :

1. Fence–off the working area from the public. Diversion arrangement shall be taken if necessary.
2. Bamboo scaffolds details shall refer to the following figure as shown on drawing no. GN–1.
   - Figure 4 Working platform on a double–row bamboo scaffold

WORKING PROCEDURES :

1. Cut down the steel mesh from top to bottom. (To be removed in bay by bay)
2. Remove the steel posts and their base plates.
3. All materials shall be cut down into small pieces for construction waste disposal.
4. Make good and reinstate the work area affected by the works.
5. Dismantle the bamboo scaffold and clean the site.

MINOR WORKS ITEM 3.5	REMOVAL OF EXTERNAL MESH FENCE

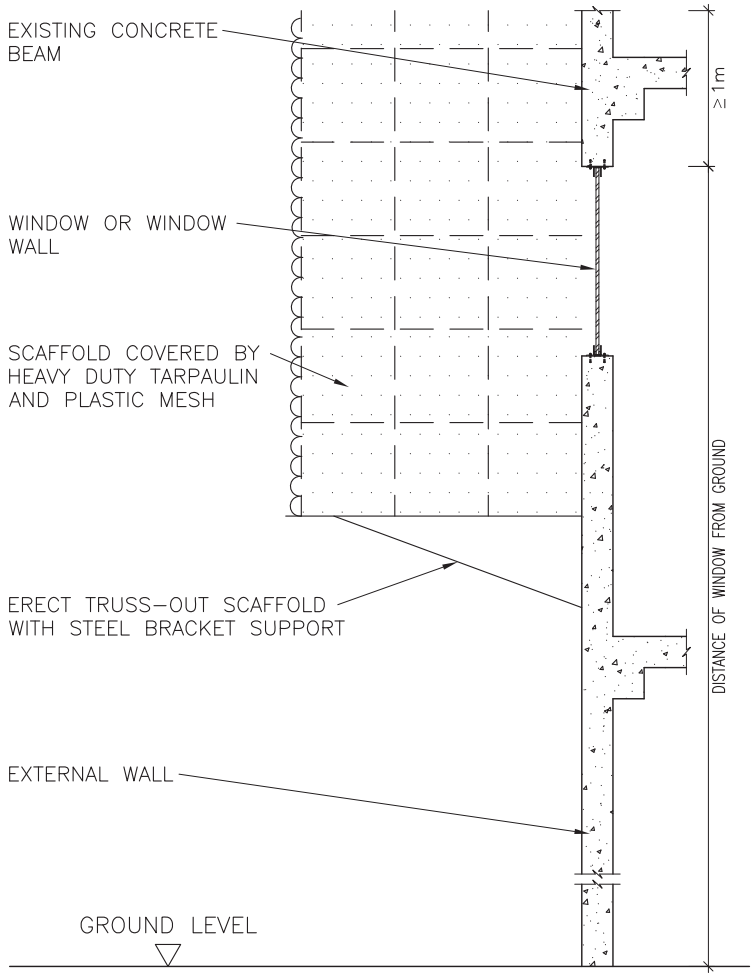

WINDOW OR WINDOW WALL

GENERAL NOTES :

1. The works carried out shall comply with the Buildings Ordinance and the provisions of other enactment. (Reference can be made to the examples listed in Sections 3 and 10 of the Guidelines.)
2. The requirements of PNAP APP–116 and PNRC 47 should be followed for the standards and details of aluminium windows and fixing of hinges.
3. All works shall comply with the following CoP/ standards:
   - Building (Construction) Regulations
   - Code of Practice on Wind Effects in Hong Kong 2004
   - Code of Practice for the Structural Use of Steel 2005
   - Code of Practice for the Structural Use of Concrete 2004
   - British Standard BS 6262 – Structural Use of Glass in Building
4. All structural steel plates and angles to be Grade S275 to BS EN 10029 and BS EN 10056 respectively. All structural steel plates and angles shall be hot dip galvanized to BS EN ISO 1461.
5. All anchor bolts to be HILTI HSC–AR M8x40 @ 250 mm c/c and shall be installed according to the manufacturer's specifications.
6. All glass panels to be monolithic tempered glass with the allowable stress of 50 N/mm^2 to BS 6262.
7. Non–structural silicone sealant to be Dow Corning 791 or equivalent.
8. Structural silicone sealant to be Dow Corning 795 or equivalent. Maximum allowable design strength 30 N/mm^2.
9. Existing concrete grade is assumed to be Grade 20 with the min. cube strength of $20N/mm^2$.
10. The works do not result in any additional load to any cantilevered slab.
11. Size of glass should be 2mm smaller than the opening size to allow thermal expansion.
12. Proposed works do not involve the alteration of any other structural elements, except a simply supported beam that:
    (i) is not of pre–stressed construction; and
    (ii) is not used to support any column, flat slab or ribbed beam

PREPARATION WORKS :

1. Obtain the original design drawings/ information for reference prior to the commencement of works.
2. Inform the utilities company or sector if the works to be involved.
3. Carry out condition survey of the parent structure/ existing condition prior to the commencement of works.

DESIGN LOADS :

1. Dead Load = 27 kN/m^3
2. Wind Load = 4.00 kN/m^2 with total pressure coeff. of 1.4 (100m above site ground level)
3. 12mm THK. tempered glass and its fixing is designed for glass span of 1.2m, spanning one–way.

SAFETY AND PRECAUTIONARY MEASURES

1. Fence–off the working area from the public. Diversion arrangement shall be taken if necessary.
2. Bamboo scaffolds details shall refer to the following figures as shown on drawing no. GN–1.
   - Figure 2 Truss–out bamboo scaffold
   - Figure 4 Working platform on a double–row bamboo scaffold

WORKING PROCEDURES :

A. Installation
   1. Setting out the level and alignment of the window frame onto the wall.
   2. Place the window frame into correct setting out.
   3. Fix the angle and neoprene pad in accordance with the original design.
   4. Seal up the gap between the edge of opening and window frames by using non–shrink cementitious grout.
   5. Make good and reinstate the affected areas of the parent building.
   6. Dismantle the bamboo scaffold and clean the site.

B. Alteration
   1. Temporary fix the window frame to a rigid point by using proper stainless steel wire/ nylon.
   2. Break off the concrete surrounding of the original window frame by hand–held hydraulic breaker. Allow 25mm to 75mm between the edge of opening and window frames.
   3. Cut off the original steel angle.
   4. Remove the original window glass and install the new window frames and glass according to the new design.
   5. Make good and reinstate the affected areas of the parent building.
   6. Dismantle the bamboo scaffold and clean the site.

C. Repair
   1. Temporary fix the window frame to a rigid point by using proper stainless steel wire/ nylon rope.
   2. Remove the defective window glass and using the same size of glass for replacement.
   3. Make good and reinstate the affected areas of the parent building.
   4. Dismantle the bamboo scaffold and clean the site.

Remarks: 1. For making opening on non–loadbearing external wall, please refer to minor works item 1.15, 2.13, 2.14 or 3.11 where appropriate.
2. For removal of existing window or window wall, please refer to minor works item 2.9 or 3.7.

MINOR WORKS ITEM 3.6	CONSTRUCTION, ALTERATION OR REPAIR OF WINDOW OR WINDOW WALL	SHEET 1 OF 2

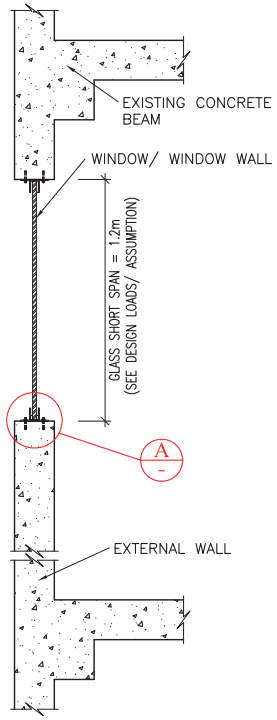

SECTION OF WINDOW/ WINDOW WALL

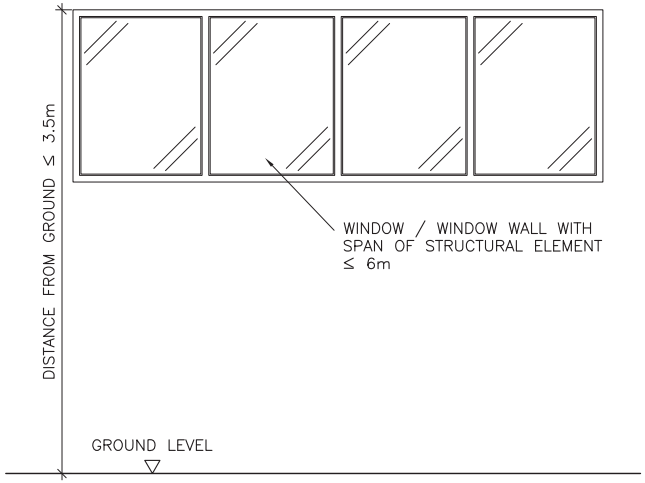

CONDITIONAL DIAGRAM 1
(DISTANCE FROM GROUND ≤ 3.5m)

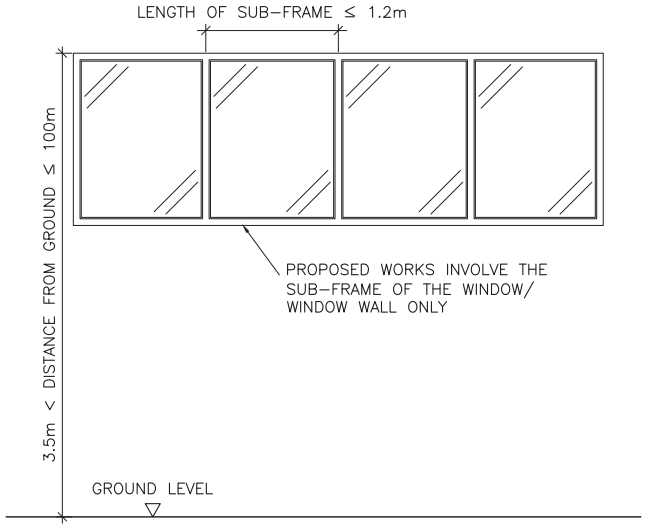

CONDITIONAL DIAGRAM 2
(3.5m ≤ DISTANCE FROM GROUND ≤ 100m)

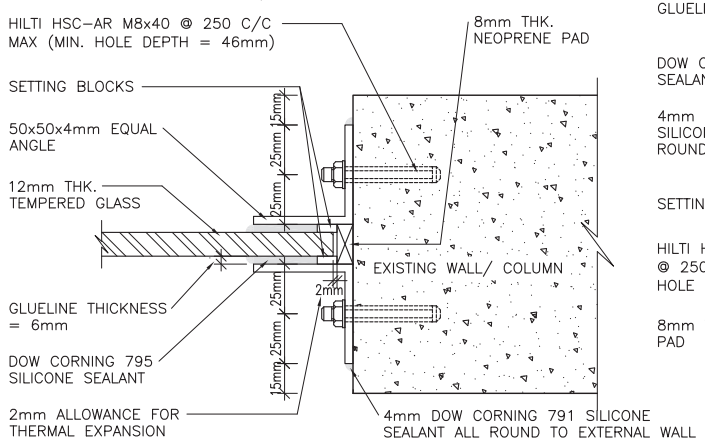

SIDE EDGE FIXING DETAILS

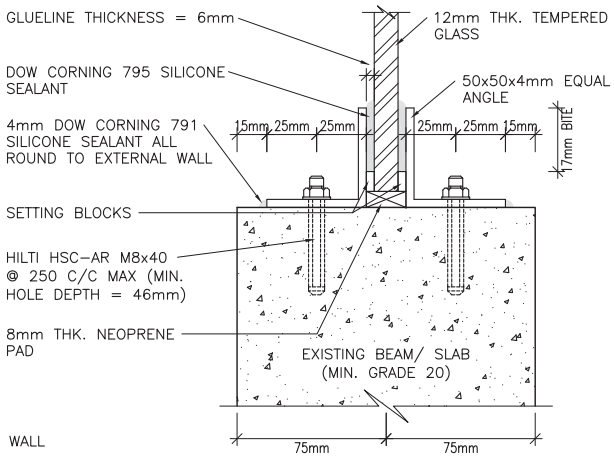

DETAIL A : BOTTOM EDGE FIXING DETAILS

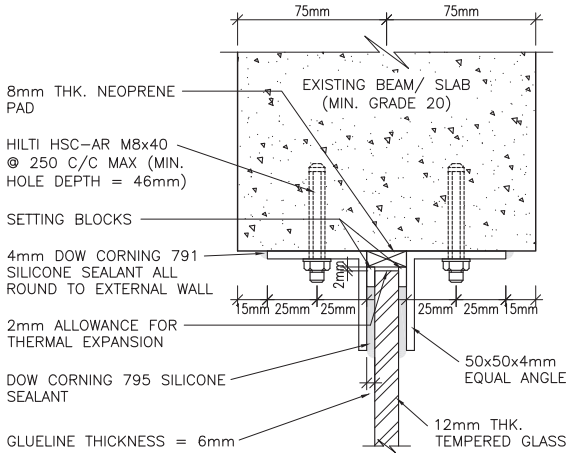

TOP EDGE FIXING DETAILS

MINOR WORKS ITEM 3.6	CONSTRUCTION, ALTERATION OR REPAIR OF WINDOW OR WINDOW WALL	SHEET 2 OF 2

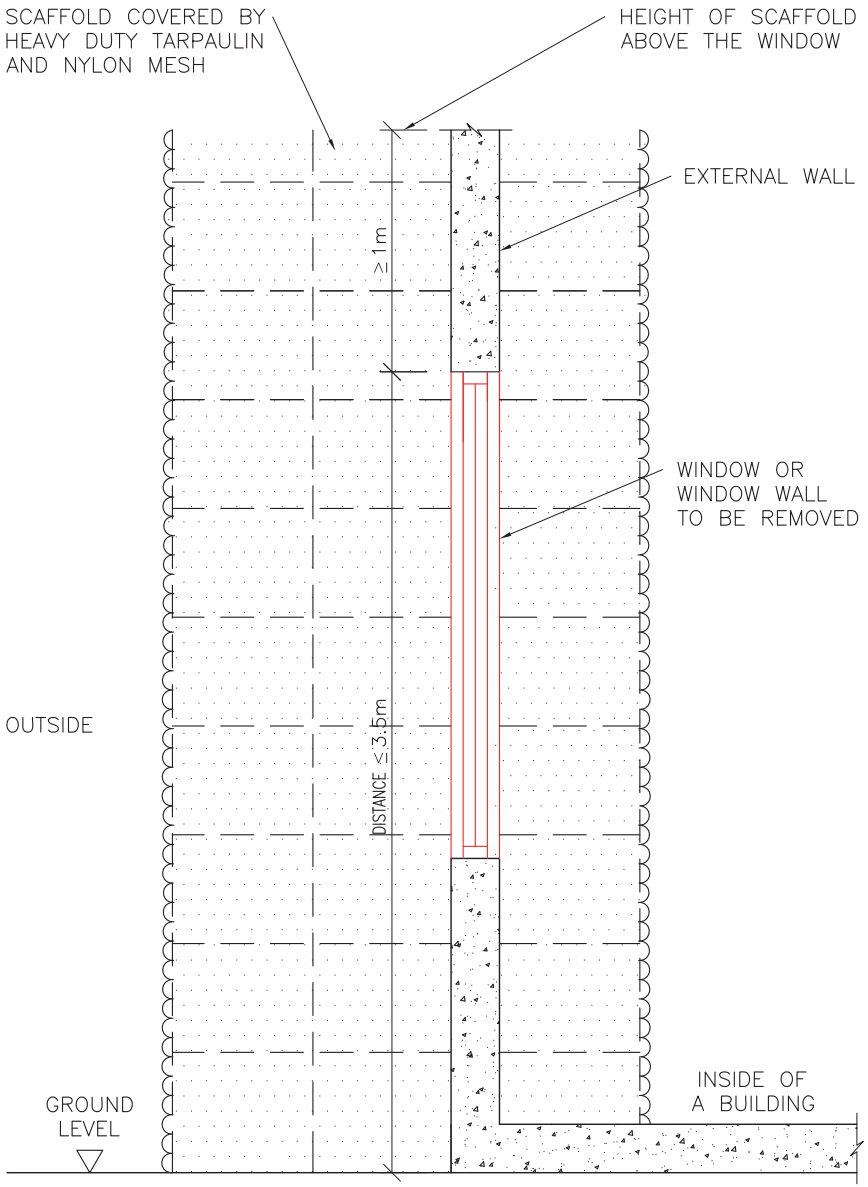

GENERAL NOTES :

The works carried out shall comply with the Buildings Ordinance and the provisions of other enactment. (Reference can be made to the examples listed in Sections 3 and 10 of the Guidelines.)

PREPARATION WORKS :

1. Obtain the existing design drawings/ information for reference prior to the commencement of works
2. Carry condition survey of the parent structure/ existing condition prior to the commencement of works.

SAFETY AND PRECAUTIONARY MEASURES :

1. Fence–off the working area from the public. Diversion arrangement shall be taken if necessary.
2. Bamboo scaffolds details shall refer to the following figure as shown on drawing no. GN–1.
   - Figure 4 Working platform on a double–row bamboo scaffold

WORKING PROCEDURES :

1. Remove all glazing manually.
2. Remove all openable window frames manually by mechanical tool where appropriate.
3. Remove the main frame/ mullion/ transome using mechanical hand held tool.
4. All members shall be cut into small pieces for construction waste disposal.
5. Provide temporary protection to the wall opening for subsequent works where necessary.
6. Dismantle bamboo scaffold and clean the site.

Remarks :

1. For window erection to the opening, please refer to minor works item 3.6.
2. For block wall erection to the opening, please refer to minor works item 2.14.

MINOR WORKS ITEM 3.7	REMOVAL OF WINDOW OR WINDOW WALL

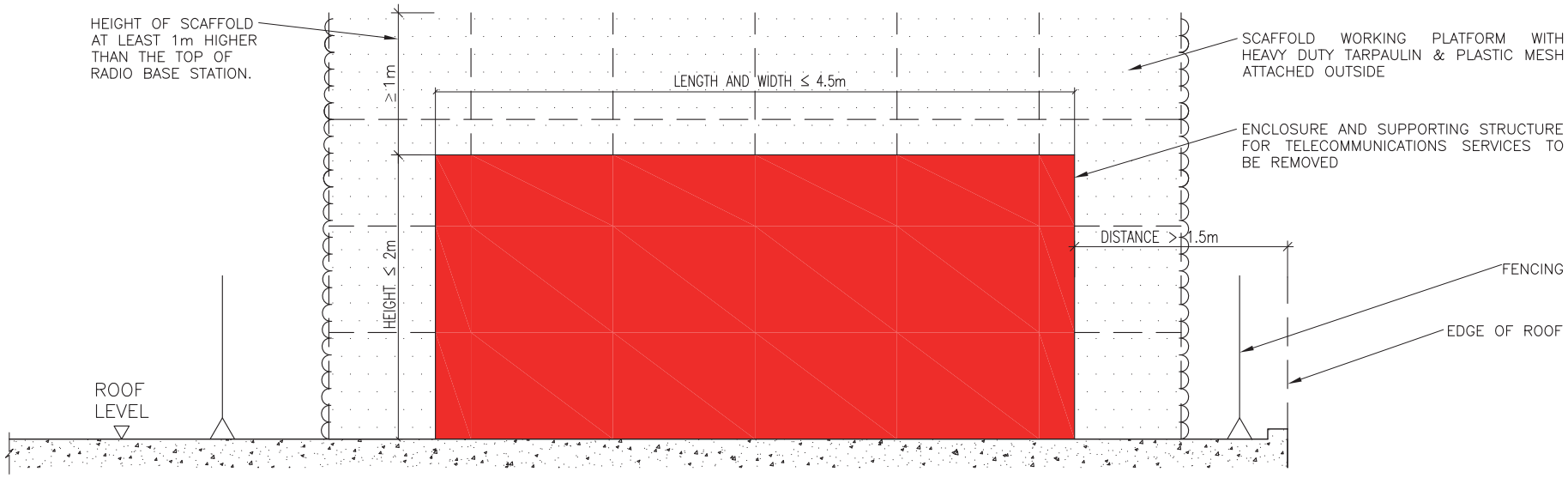

GENERAL NOTES :

The works carried out shall comply with the Buildings Ordinance and the provisions of other enactment. (Reference can be made to the examples listed in Sections 3 and 10 of the Guidelines.)

PREPARATION WORKS :

1. Obtain the existing design drawings/ information for reference prior to the commencement of works
2. Inform the utilities company or sector if the works to be involved.
3. Carry out condition survey of the parent structure/ existing condition prior to the commencement of works.

SAFETY AND PRECAUTIONARY MEASURES :

1. Fence–off the working area from the public. Diversion arrangement shall be taken if necessary.
2. No accumulation of demolished parts should be stored on roof.
3. Bamboo scaffolds details shall refer to the following figure as shown on drawing no. GN–1.
   - Figure 4 Working platform on a double–row bamboo scaffold

WORKING PROCEDURES :

1. Disconnect all utilities prior to the removal of enclosure or cabinet of the telecommunication services.
2. Remove the enclosure or cabinet of the telecommunication services by releasing all fixing bolts if necessary.
3. Remove the telecommunication equipment.
4. Remove the concrete supporting structure by hand–held hydraulic breaker. Debris from removal works should be put into bags and retrieved into the main building access for construction waste disposal.
5. Remove the steel supporting structure by oxy–acetylene torch to small pieces for construction waste disposal.
6. Make good and reinstate the affected areas (including waterproofing layer) of the parent building.
7. Remove the bamboo scaffold and clean the site.

MINOR WORKS ITEM 3.8	REMOVAL OF RADIO BASE STATION FOR TELECOMMUNICATIONS SERVICES IN THE FORM OF AN ENCLOSURE OR EQUIPMENT CABINET TOGETHER WITH ITS SUPPORTING STRUCTURE LOCATED ON A ROOF OF A BUILDING

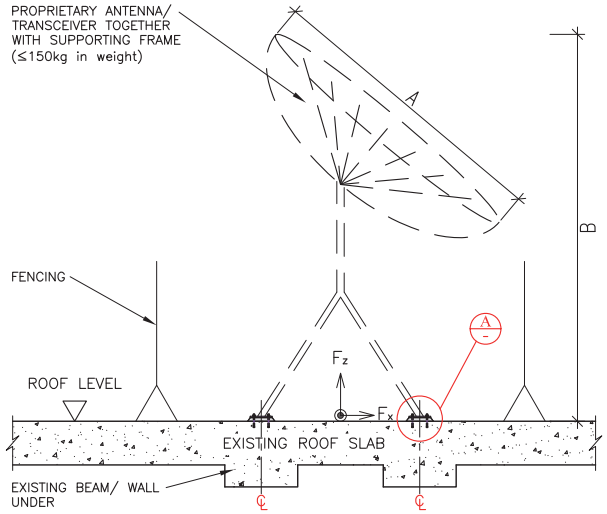

ERECTION OF SUPPORTING STRUCTURE

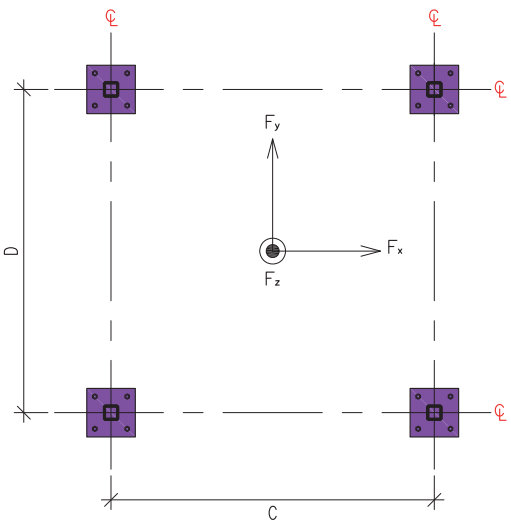

LEG SETTING

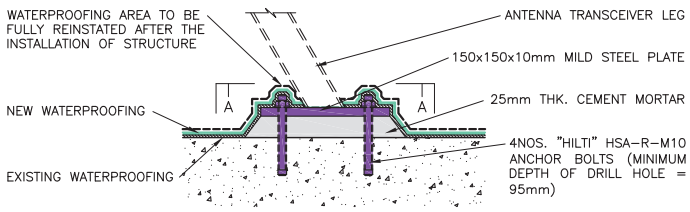

DETAIL A

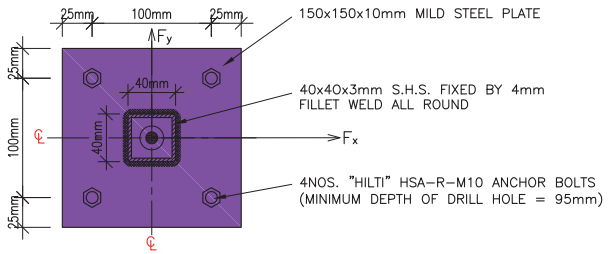

SECTION A–A

GENERAL NOTES :

1. The works carried out shall comply with the Buildings Ordinance and the provisions of other enactment. (Reference can be made to the examples listed in Sections 3 and 10 of the Guidelines.)
2. All works shall comply with the following CoP/ standards:
   - Building (Construction) Regulations
   - Code of Practice on Wind Effects in Hong Kong 2004
   - Code of Practice for the Structural Use of Steel 2005
3. All structural steel to be grade S275 class 1 to BS EN 10210 and shall be hot dip galvanized to BS EN ISO 1461.
4. All connections to be 4 mm fillet weld all round with weld strength, pw = 220 N/mm² to BS EN 1011 and all electrodes to BS EN ISO 2560.
5. All anchors bolt to be Hilti HSA–R M16 and shall be installed according to the manufacturer's specification.
6. Existing concrete is assumed to be Grade 20 with a minimum thickness 150 mm.
7. The structural adequacy of the supporting parent structure (roof slab) due to the effect of minor works are to be checked to the satisfaction of the structural requirements prior to the installation.
8. The structural strength of the proprietary antenna/ transceiver adopted must satisfy the structural requirement including the wind load.

DESIGN LOADS :

1. Dead Load = 1.50kN
2. Wind Load = 2.86kN/m² with force coeff. 2.0

DESIGN DIMENSIONS :

1. A = 0.8m, B = 2m, C = 1m, D = 1m
2. Roof Slab Thickness = 150mm
3. Maximum design forces per leg : F_x = 0.72kN, F_y = 0.72kN, F_z = 4.20kN (UP), 4.76kN (DOWN)

PREPARATION WORKS :

1. Obtain the existing design drawings/ information for reference prior to the commencement of works.
2. Inform the utilities company or sector if the works to be involved.
3. Carry out condition survey of the parent structure/ existing condition prior to the commencement of works.

SAFETY AND PRECAUTIONARY MEASURES :

1. Fence–off the working area from pedestrian. Diversion arrangement shall be taken if necessary.
2. No accumulation of demolished parts should be stored on roof.

WORKING PROCEDURES :

A. Erection
1. Setting out for the proposed leg and remove roof finishes to concrete surface of the roof slab.
2. Erect the base as per antenna/ transceiver supplier's instructions.
3. Reinstate the affected waterproofing layer and carry out flood test to ensure the waterproofing layer has been laid properly.
4. Make good and reinstate the other affected areas of the parent structure and clean the site.

B. Alteration
1. Temporary removes the antenna/ transceiver and all the associated wiring connected.
2. Alter the supporting structure according to antenna/ transceiver supplier's instructions.
3. Reinstate the affected waterproofing layer and carry out flood test to ensure the waterproofing layer has been laid properly.
4. Make good and reinstate the other affected areas of the parent structure and clean the site.

C. Removal
1. Removes the antenna/ transceiver and all the associated wiring connected.
2. Remove the steel supporting structure (the whole or partial member(s) by hand–held cutting machine and torch to small pieces for construction waste disposal.
3. Reinstate the affected waterproofing layer and carry out flood test to ensure the waterproofing layer has been laid properly.
4. Make good and reinstate the other affected areas of the parent structure and clean the site.

MINOR WORKS ITEM 3.9	ERECTION, ALTERATION OR REMOVAL OF SUPPORTING STRUCTURE FOR AN ANTENNA OR TRANSCEIVER ON THE ROOF OF A BUILDING

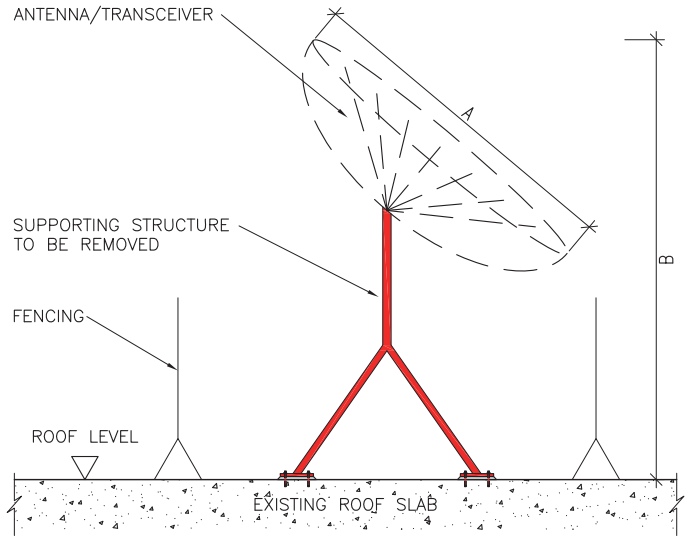

REMOVAL OF SUPPORTING STRUCTURE

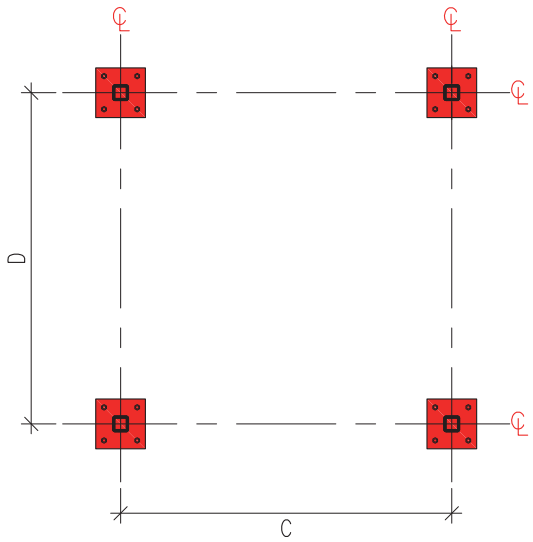

LEG SETTING

GENERAL NOTES :

The works carried out shall comply with the Buildings Ordinance and the provisions of other enactment. (Reference can be made to the examples listed in Sections 3 and 10 of the Guidelines.)

DESIGN DATA :

A = 0.8m, B = 2m, C = 1m, D = 1m

PREPARATION WORKS :

1. Obtain the existing design drawings/ information for reference prior to the commencement of works.
2. Inform the utilities company or sector if the works to be involved.
3. Carry out condition survey of the parent structure/ existing condition prior to the commencement of works.

SAFETY AND PRECAUTIONARY MEASURES :

1. Fence–off the working area from pedestrian. Diversion arrangement shall be taken if necessary.
2. No accumulation of demolished parts should be stored on roof.

WORKING PROCEDURES :

1. Remove the antenna/ transceiver and all the associated wiring connected.
2. Remove the steel supporting structure (the whole or partial member(s) by hand–held cutting machine and torch to small pieces for construction waste disposal.
3. Make good and reinstate the affected areas (including waterproofing layer) of the parent building and clean the site.

MINOR WORKS ITEM 3.10	REMOVAL OF SUPPORTING STRUCTURE FOR AN ANTENNA OR TRANSCEIVER LOCATED ON THE ROOF OF A BUILDING

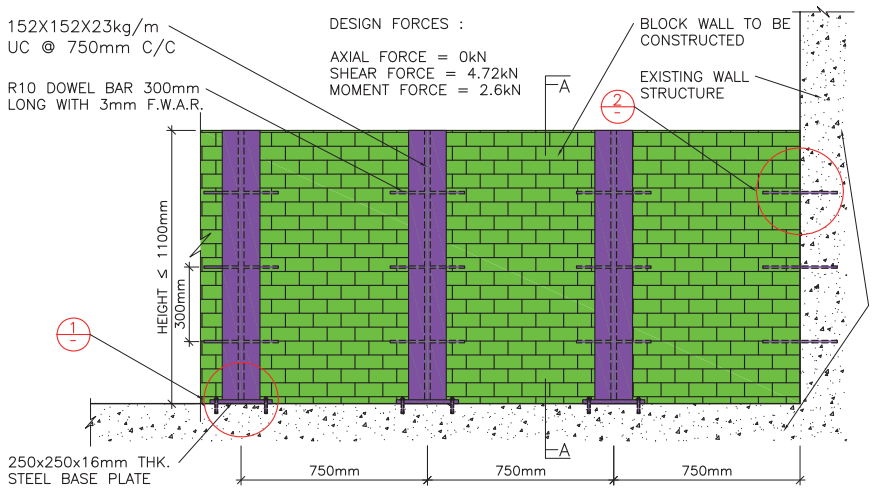

ERECTION OF EXTERNAL BLOCK WALL
(OTHER THAN A LOAD BEARING WALL)

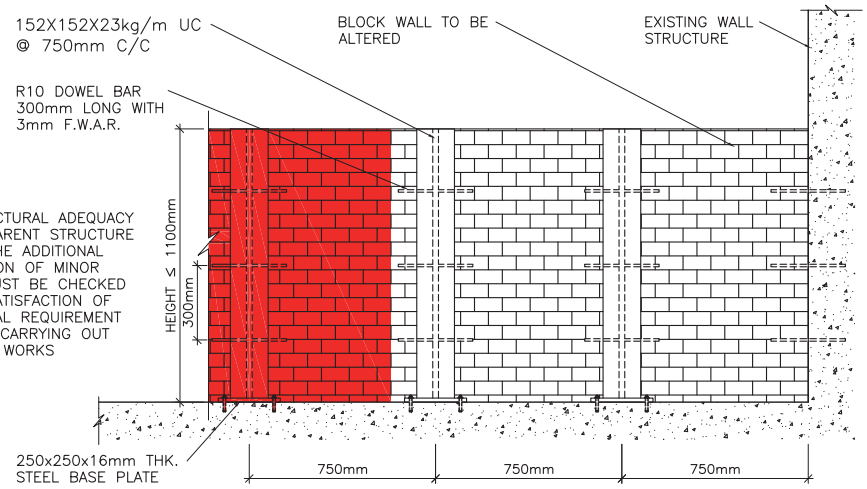

ALTERATION OF EXTERNAL BLOCK WALL
(OTHER THAN A LOAD BEARING WALL)

GENERAL NOTES :

1. The works carried out shall comply with the Buildings Ordinance and the provisions of other enactment. (Reference can be made to the examples listed in Sections 3 and 10 of the Guidelines.)
2. All works shall comply with the following CoP/ standards:
   - Building (Construction) Regulations
   - Code of Practice for Structural Use of Steel 2005
   - Code of Practice on Wind Effects in Hong Kong 2004
   - Code of Practice for Demolition of Buildings 2004
   - BS5628 – Code of Practice for the Use of Masonry : Part 1 Structural use of Unreinforced Masonry
   - Specifications and Method Statements for YTONG AAC Block Wall
3. All structural steel to be grade S275 class 1 to BS EN 10025 and shall be hot dip galvanized to BS EN ISO 1461.
4. All connections to be 3 mm fillet weld all round with weld strength, p_w = 220 N/mm² to BS EN 1011 and all electrodes to BS EN ISO 2560.
5. All anchors bolts to be Hilti HSC–AR M12x60 and shall be installed according to the manufacturer's specification.
6. Existing concrete grade is assumed to be Grade 30.
7. All YTONG AAC blocks shall comply with BS6073–1 as solid block with the minimum compressive strength of 4 N/mm² and the density of 650 kg/m³.
8. Mortar designation shall be Class (ii) to Table 1 of BS5628–1 with the mean compressive strength at 28 days of 4.5 N/mm² by site tests.

DESIGN LOADS :

1. DEAD LOAD = 6.5 kN/m²
2. WIND LOAD = 5.72 kN/m² with force coefficient of 2.0 (100m above site ground level)

PREPARATION WORKS :

1. Obtain the existing design drawings/ information for reference prior to the commencement of works.
2. Carry out condition survey of the parent structure/ existing condition prior to the commencement of works.
3. Obtain the original design of the approved structure for reference of any required reinstatement works.

SAFETY AND PRECAUTIONARY MEASURES :

1. Fence–off the working area from the public. Diversion arrangement shall be taken if necessary.
2. Bamboo scaffolds details shall refer to the following figure as shown on drawing no. GN–1.
   - Figure 2 Truss–out bamboo scaffold
   - Figure 4 Working platform on a double–row bamboo scaffold

WORKING PROCEDURES :

A. Erection

1. Install the required works as per the drawing.
2. Make good and reinstate the affected areas of the parent building.
3. Dismantle the bamboo scaffold and clean the site.

B. Alteration (E.g. Reducing the length of the block wall)

1. Set out the areas to be removed.
2. Use saw cut machine to saw cut the render and remove the brickwork by using mechanical hand–held tools.
3. Cut down the steel posts into small pieces for construction waste disposal.
4. Apply 20mm thick rendering (cement : sand = 1 : 3) to the new edge of the block wall.
5. Make good and reinstate the affected areas.
6. Dismantle the bamboo scaffold and clean the site.

C. Removal

1. Remove the brickwork by using mechanical hand–held tools.
2. Remove the top 300mm wall layer first and repeat layer by layer.
3. Cut down the steel posts into small pieces for construction waste disposal.
4. Make good and reinstate the affected areas.
5. Dismantle the bamboo scaffold and clean the site.

Remarks: Protect the external wall opening by providing a barrier not less than 1100mm high if necessary.

MINOR WORKS ITEM 3.11	ERECTION, ALTERATION OR REMOVAL OF EXTERNAL BLOCK WALL (OTHER THAN A LOAD BEARING WALL) OF A BUILDING	SHEET 1 OF 2

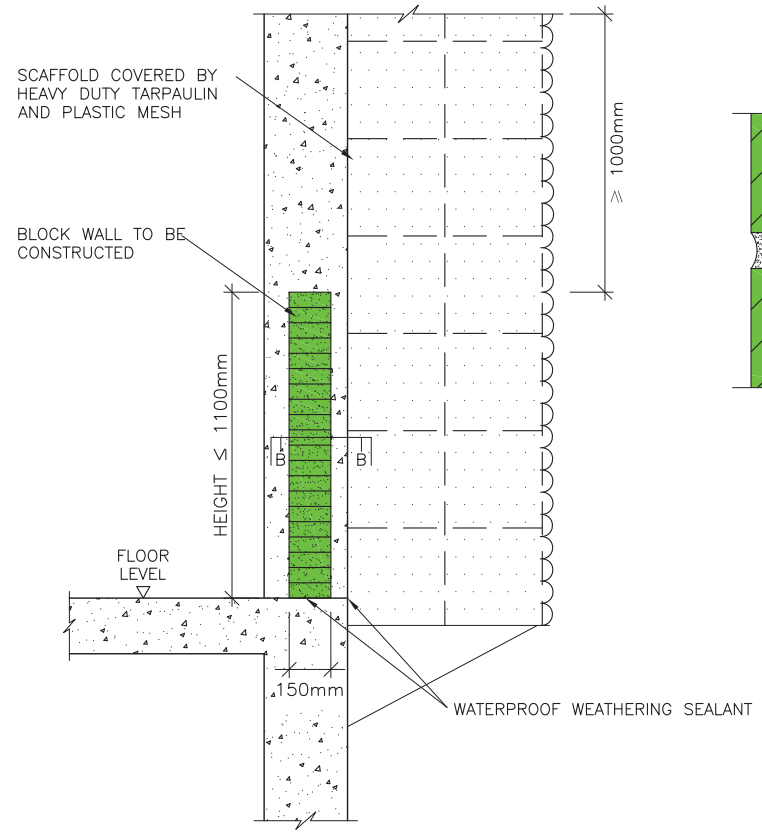

SECTION A–A

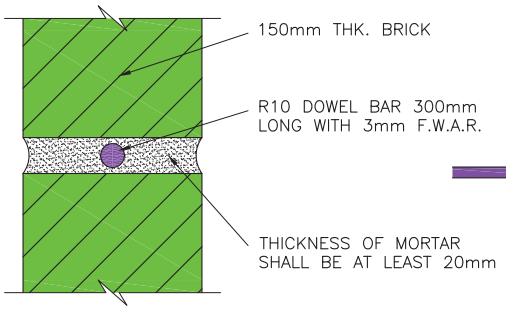

SECTION C–C

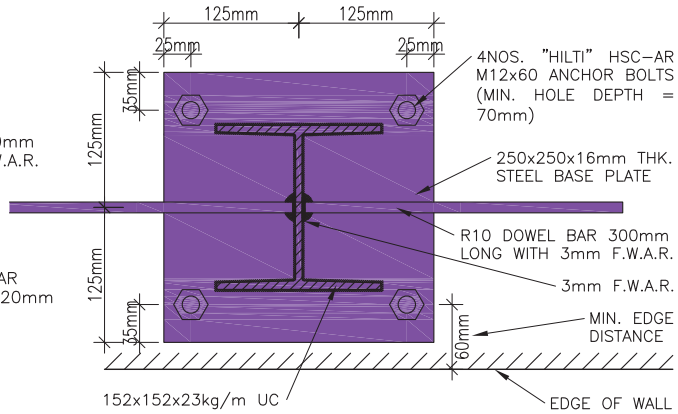

DETAIL 1

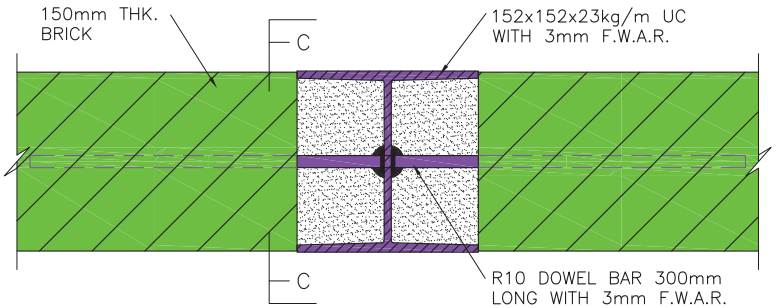

SECTION B–B

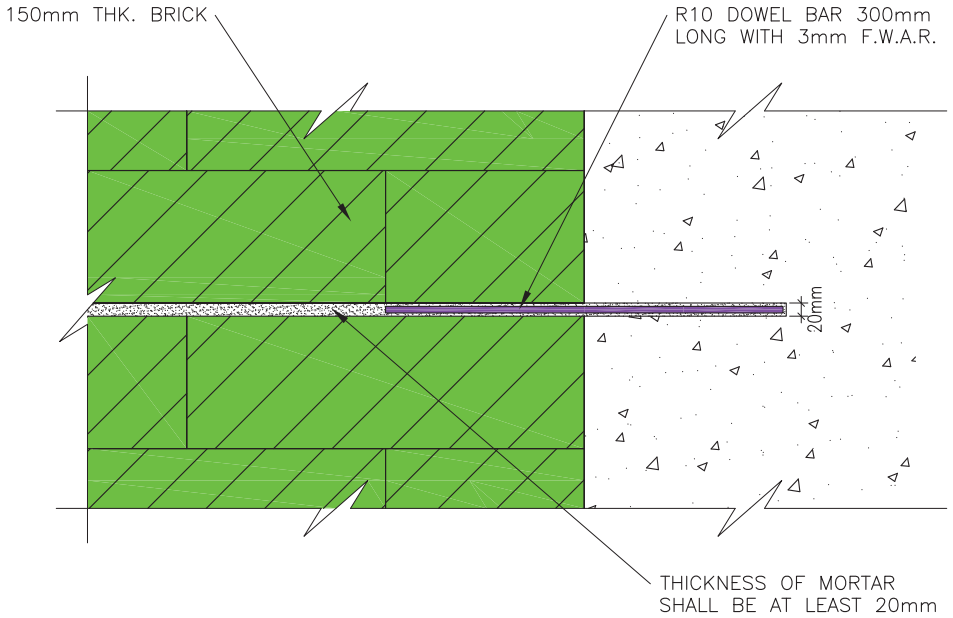

DETAIL 2

MINOR WORKS ITEM 3.11	ERECTION, ALTERATION OR REMOVAL OF EXTERNAL BLOCK WALL (OTHER THAN A LOAD BEARING WALL) OF A BUILDING	SHEET 2 OF 2

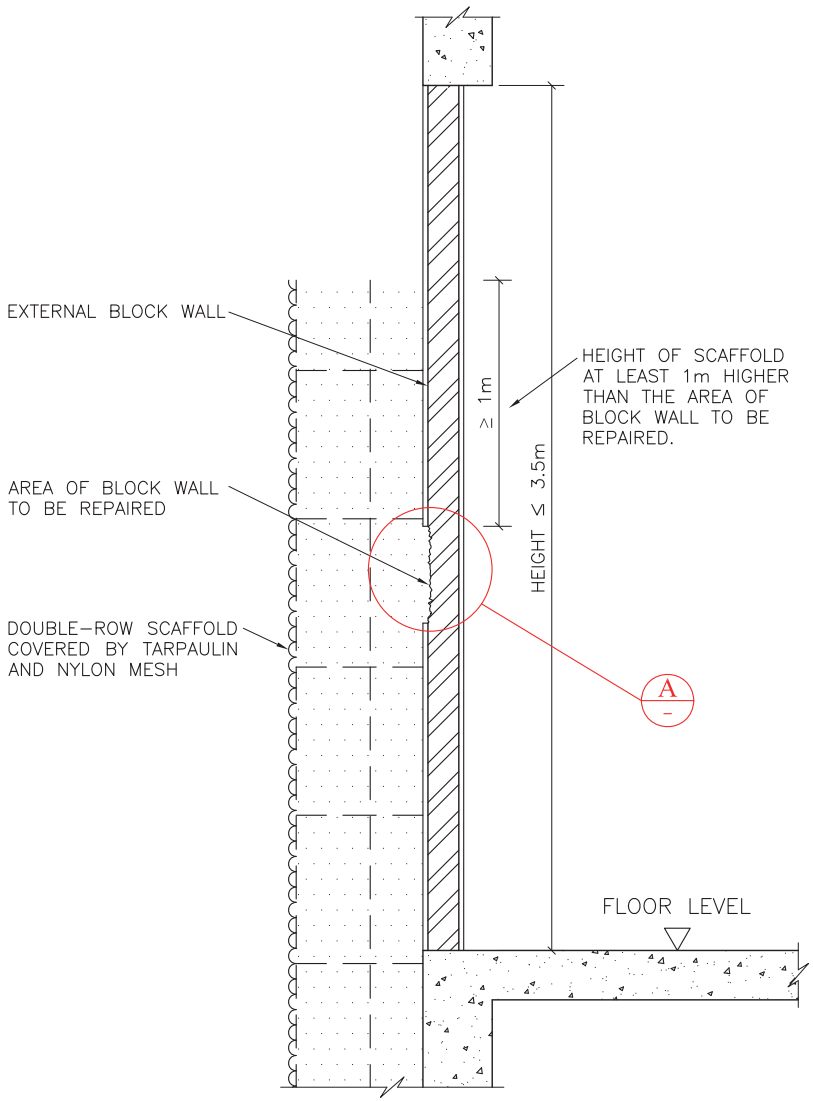

REPAIR OF EXTERNAL BLOCK WALL

GENERAL NOTES :

The works carried out shall comply with the Buildings Ordinance and the provisions of other enactment. (Reference can be made to the examples listed in Sections 3 and 10 of the Guidelines.)

PREPARATION WORKS :

1. Obtain the existing design drawings/ information for reference prior to the commencement of works.
2. Inform the utilities company or sector if the works to be involved.
3. Carry condition survey of the parent structure/existing condition prior to the commencement of works.

SAFETY AND PRECAUTIONARY MEASURES :

1. Fence–off the working area from the public. Diversion arrangement shall be taken if necessary.
2. Bamboo scaffolds details shall refer to the following figures as shown on drawing no. GN–1.
   - Figure 1 Double–row bamboo scaffold and working platform over pavement
   - Figure 4 Working platform on a double–row bamboo scaffold

WORKING PROCEDURES :

1. Locate the crack area on wall by visual inspection and saw cut the rendering around the area to be repaired.
2. Remove the rendering using hand–held mechanical tools.
3. Rack out the defective/ loosen mortar along the fault line on the block wall to a minimum depth of 25mm.
4. Apply pointing in cement and sand (1:1) to the exposed joints.
5. Apply 20mm thick rendering (cement : sand = 1:3) to the wall.
6. Make good and reinstate the affected areas of the parent building.
7. Dismantle the bamboo scaffold and clean the site.

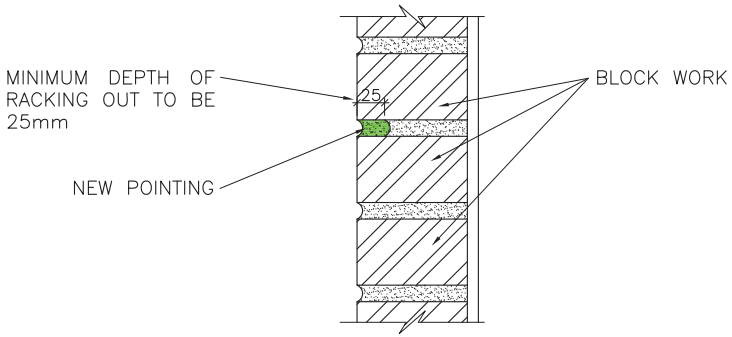

DETAIL A

MINOR WORKS ITEM 3.12	REPAIR OF EXTERNAL BLOCK WALL (OTHER THAN A LOAD BEARING WALL) OF A BUILDING

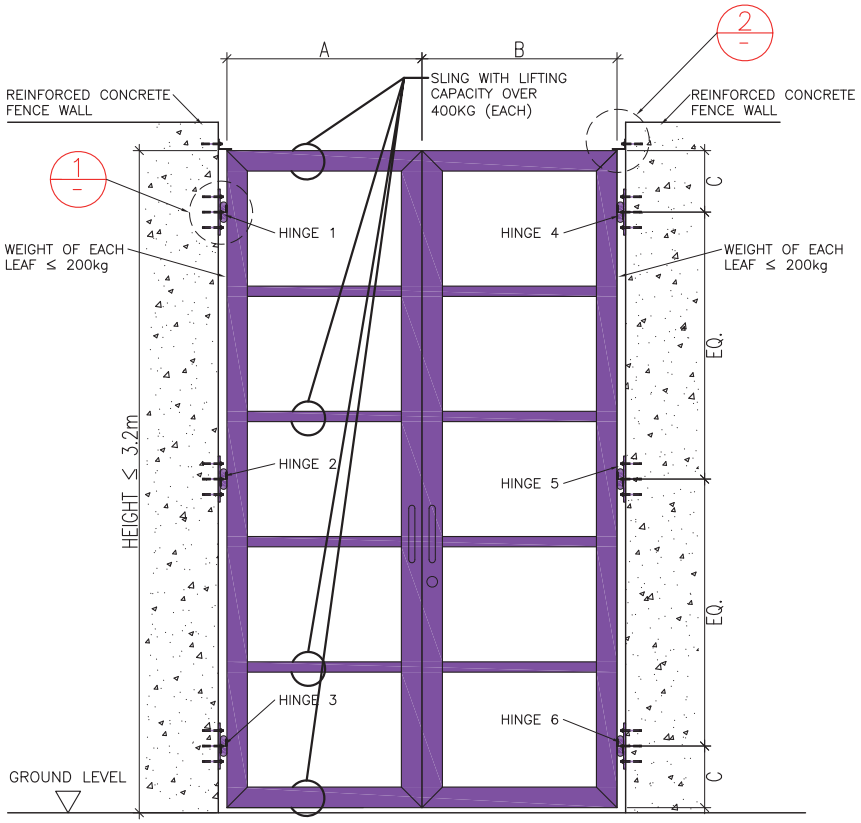

DESIGN FORCES (UNFACTORED)
(NOTATIONS AS SHOWN IN DIAGRAM BELOW)

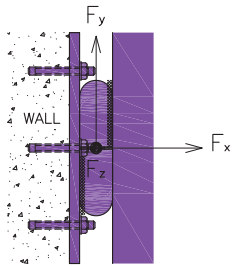

LEGEND :

Fx – Horizontal force parallel to wall
Fy – Vertical force parallel to wall
Fz – Horizontal force perpendicular to wall

Case 1 : Door Closed

Forces (kN)	Hinge no. 1	2	3
Fx	0.5	0	−0.5
Fy	−1.0	0	−1.0
Fz	+/−7.0	0	+/−7.0

(Hinges no. 4, 5 and 6 are similar. Users can conservatively adopted the same design forces as hinges no. 1, 2 and 3 respectively)

Case 2 : Door Opened (90 degree to the wall)

Forces (kN)	Hinge no. 1	2	3
Fx	+/−7.0	0	+/−7.0
Fy	−1.0	0	−1.0
Fz	0.5	0	−0.5

(Hinges no. 4, 5 and 6 are similar. Users can conservatively adopted the same design forces as hinges no. 1, 2 and 3 respectively)

ERECTION OF METAL GATE AT A FENCE WALL OR AT AN ENTRANCE TO A BUILDING

GENERAL NOTES :

1. The works carried out shall comply with the Buildings Ordinance and the provisions of other enactment. (Reference can be made to the examples listed in Sections 3 and 10 of the Guidelines.)
2. All works shall comply with the following CoP/ standards:
   - Building (Construction) Regulations
   - Code of Practice on Wind Effects in Hong Kong 2004
   - Code of Practice for the Structural Use of Steel 2005
   - Code of Practice for the Structural Use of Concrete 2004
3. All structural steel to be grade S275 class 1 to BS EN 10025 and shall be hot dip galvanized to BS EN ISO 1461.
4. All connections to be 5 mm fillet weld all round with weld strength, pw = 220 N/mm² to BS EN 1011 and all electrodes to BS EN ISO 2560.
5. All anchor bolts to be Hilti HSC–AR M10x40 and shall be installed according to the manufacturer's specification.
6. Concrete grade of the existing reinforced concrete wall shall be Grade 30 with a minimum thickness of 200mm.

DESIGN DIMENSIONS :

A = 1.2m, B = 1.2m, C = 300mm, Height = 3.2m

DESIGN LOADS :

1. Dead Load = 200kg/Leaf
2. Wind Load = 1.82kN/m² with force coeff. 2.0 (5m above site ground level)

PREPARATION WORKS :

1. Obtain the existing design drawings/ information for reference prior to the commencement of works.
2. Carry out condition survey of the parent structure/ existing condition to ensure it is structurally capable to hold the metal gate prior to the commencement of works.
3. Disconnect the electric locking device (if any) prior to the commencement of works.

SAFETY AND PRECAUTIONARY MEASURES :

1. Fence–off the working area from the public. Diversion arrangement shall be taken if necessary.
2. The use of lifting device shall be in accordance with relevant Code of Practice/ Guidance Notes issued by the Labour Department.

WORKING PROCEDURES :

A. Erection

1. Install the metal gate as per the drawing.
2. Check the gate to ensure if it can operate smoothly.
3. Make good and reinstate the affected areas of the parent structure and clean the site.

B. Alteration or Repair

1. Fix the lifting device(s) onto a secure point above the metal gate.
2. Temporary remove the metal gate by using lifting device(s).
3. Alter or repair the member(s) of the metal gate.
4. Erect the metal gate by the lifting device(s).
5. Make good and reinstate the affected areas of the parent structure and clean the site.

C. Removal

1. Refer to minor works item 3.33.

Remarks: This case excludes item 8 of the Designated Exempted Works.

MINOR WORKS ITEM 3.13	ERECTION, ALTERATION, REPAIR OR REMOVAL OF METAL GATE AT A FENCE WALL OR AT AN ENTRANCE TO A BUILDING	SHEET 1 OF 2

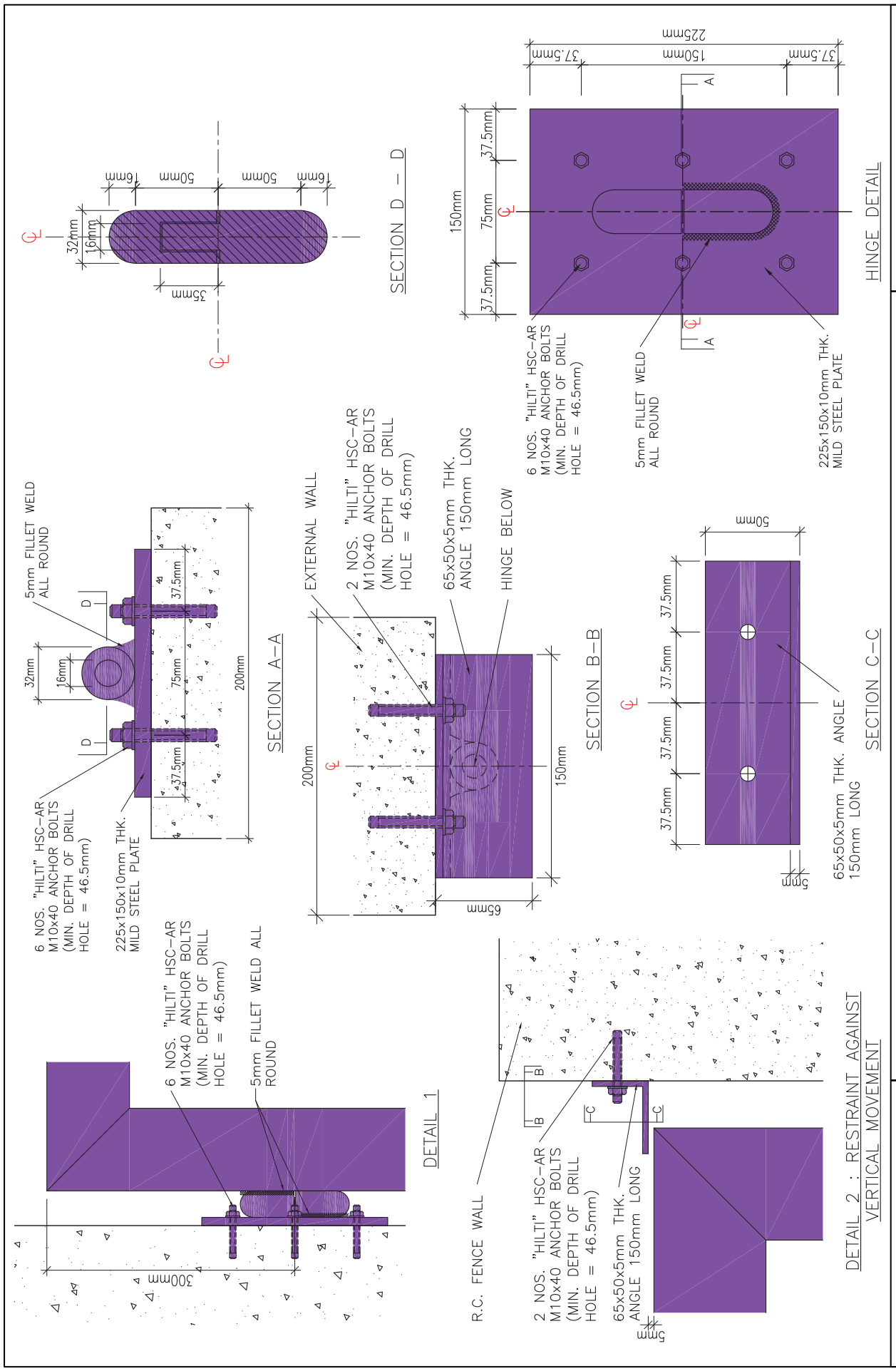

ERECTION, ALTERATION, REPAIR OR REMOVAL OF METAL GATE AT A FENCE WALL OR AT AN ENTRANCE TO A BUILDING

SHEET 2 OF 2

MINOR WORKS ITEM 3.13

2010/10

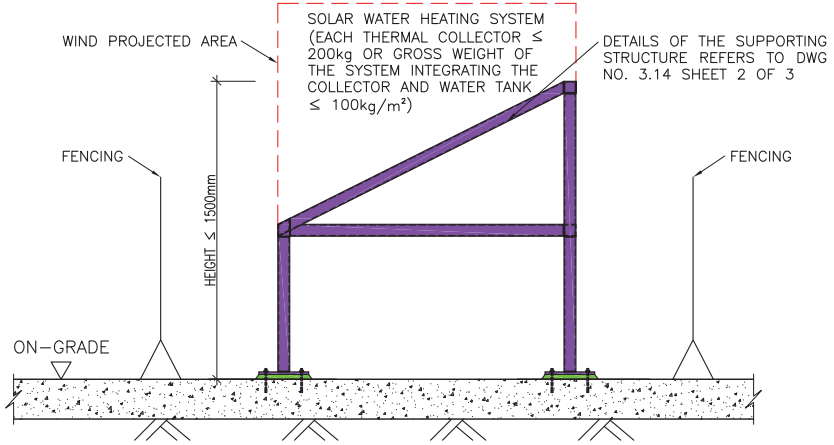

CASE 1: ERECTION OF SUPPORTING STRUCTURE ON–GRADE

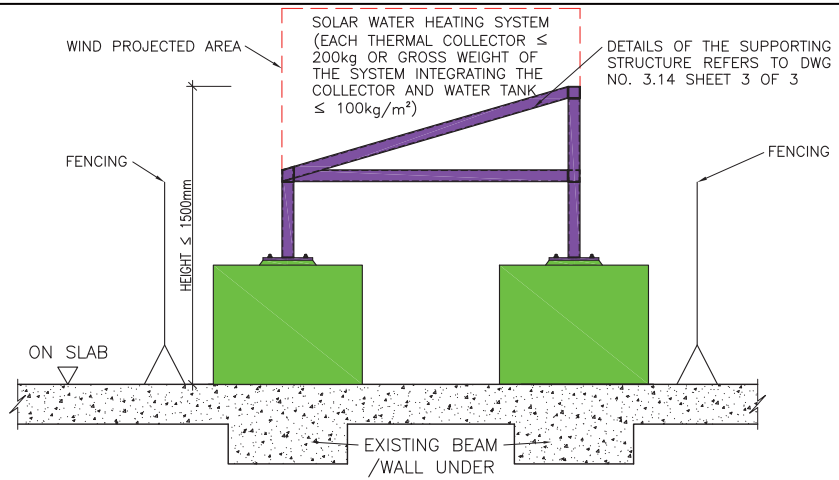

CASE 2: ERECTION OF SUPPORTING STRUCTURE ON A SLAB

GENERAL NOTES :

1. The works carried out shall comply with the Buildings Ordinance and the provisions of other enactment. (Reference can be made to the examples listed in Sections 3 and 10 of the Guidelines.)
2. All works shall comply with the following CoP/ standards:
   - Building (Construction) Regulations 1997
   - Code of Practice on Wind Effects in Hong Kong 2004
   - Code of Practice for the Structural Use of Steel 2005
   - Code of Practice for the Structural Use of Concrete 2004
   - Code of Practice for Foundations
3. All structural steel to be grade S275 class 1 to BS EN 10210 and shall be hot dip galvanized to BS EN ISO 1461.
4. All connections to be butt weld with weld strength, pw = 220 N/mm² to BS EN 1011 and all electrodes to BS EN ISO 2560.
5. All anchor bolts to be Hilti HSA–R M16 and shall be installed according to the manufacturer's specification.
6. All concrete works shall comply with CS1.
7. Existing concrete grade is assumed to be Grade 30 with 75 mm concrete cover.
8. Steel reinforcement shall comply with CS2:1995 and to be high yield type II deformed bar with the characteristic strength of 460 N/mm².
9. Minimum anchorage and lap length to be 600mm unless otherwise specified.
10. Minimum allowable ground pressure to be 50 kN/m².
11. All steel members shall be protected with one coat of "SIKA UNITHERM 38091 EXTERIOR" fire resistance paint or equivalent to the manufacturer's specification with thickness of 1.5mm (Hp/A = 175).
12. The design is valid subject to structural adequacy of existing parent structure otherwise scheme involving stiffening/ spreader beams etc. may be necessary.

DESIGN LOADS :

1. Dead Load = 1.0kN/m²
2. Live Load = 0.5kN/m²
3. Wind Load = 1.82kN/m² with force coeff. 2.0 (< 5m above site ground level) or 3.64 kN/m² with force coeff. 2.0 on roof (< 100m above site area)

PREPARATION WORKS :

1. Obtain the original design drawings/ information for reference prior to the commencement of works.
2. Carry out condition survey of the parent structure/ existing condition prior to the commencement of works.
3. Obtain the original deign of the approved structure for reference of any required reinstatement works.
4. The structural adequacy of the supporting parent structure due to the additional installation of minor works must be checked to satisfaction of structural requirement prior to the carrying out of minor works.

SAFETY AND PRECAUTIONARY MEASURES :

1. Fence–off the working area from the public. Diversion arrangement shall be taken if necessary.
2. No accumulation of demolition parts should be stored on roof.

WORKING PROCEDURES :

A. Erection
   1. Erect the supporting structure as per the drawing.
   2. Make good and reinstate the affected area (including waterproofing layer) of the parent building and clean the site.

B. Alteration
   1. Disconnect all water pipes and electrical cable or wires and remove the existing solar water heating system.
   2. Erect the additional steel member(s) from the steel bracket(s) to the designed strengthening point(s) of the supporting structure by welding.
   3. Make good and reinstate the affected area (including waterproofing layer) of the parent building and clean the site.

C. Removal
   1. Disconnect all water pipes and electrical cable or wires and remove the existing solar water heating system.
   2. Cut the supporting structure into manageable size by hand–held tools or machine and retrieve for construction waste disposal.
   3. Make good and reinstate the affected area (including waterproofing layer) of the parent building and clean the site.

Remarks: These cases exclude item 12 of the Designated Exempted Works.

MINOR WORKS ITEM 3.14	ERECTION, ALTERATION OR REMOVAL OF SUPPORTING STRUCTURE FOR A SOLAR WATER HEATING SYSTEM ON-GRADE OR ON A SLAB (OTHER THAN A CANTILEVERED SLAB)	SHEET 1 OF 3

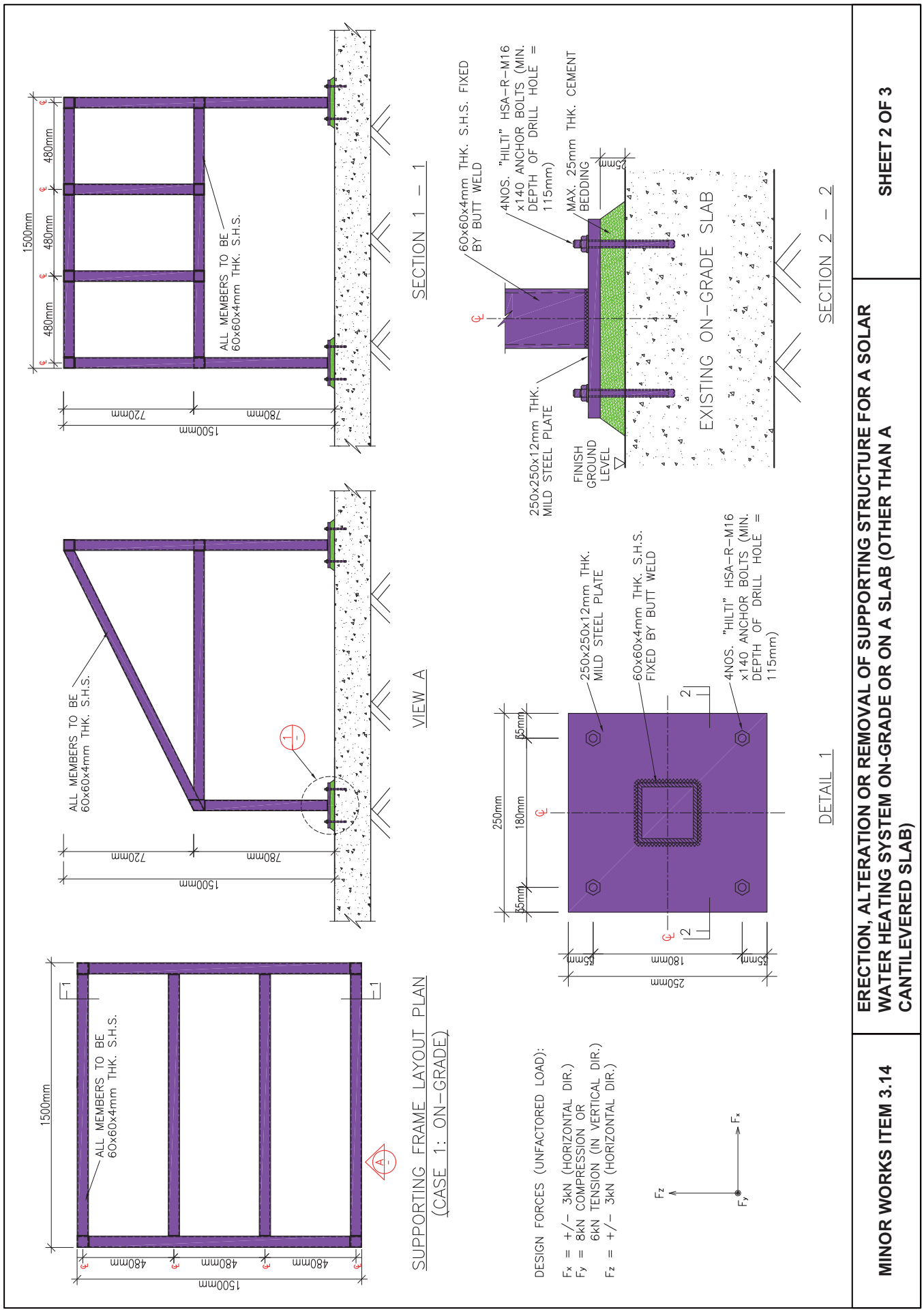
1500mm
480mm
480mm
480mm
ALL MEMBERS TO BE 60x60x4mm THK. S.H.S.
1500mm
720mm
780mm
SECTION 1 – 1
60x60x4mm THK. S.H.S. FIXED BY BUTT WELD
4NOS. "HILTI" HSA-R-M16 x140 ANCHOR BOLTS (MIN. DEPTH OF DRILL HOLE = 115mm)
MAX. 25mm THK. CEMENT BEDDING
25mm
250x250x12mm THK. MILD STEEL PLATE
FINISH GROUND LEVEL
EXISTING ON-GRADE SLAB
SECTION 2 – 2
ALL MEMBERS TO BE 60x60x4mm THK. S.H.S.
1500mm
720mm
780mm
VIEW A
250x250x12mm THK. MILD STEEL PLATE
60x60x4mm THK. S.H.S. FIXED BY BUTT WELD
4NOS. "HILTI" HSA-R-M16 x140 ANCHOR BOLTS (MIN. DEPTH OF DRILL HOLE = 115mm)
250mm
180mm
65mm
65mm
250mm
180mm
65mm
65mm
DETAIL 1
1500mm
ALL MEMBERS TO BE 60x60x4mm THK. S.H.S.
1500mm
480mm
480mm
480mm
SUPPORTING FRAME LAYOUT PLAN
(CASE 1: ON-GRADE)
DESIGN FORCES (UNFACTORED LOAD):
Fx = +/- 3kN (HORIZONTAL DIR.)
Fy = 8kN COMPRESSION OR 6kN TENSION (IN VERTICAL DIR.)
Fz = +/- 3kN (HORIZONTAL DIR.)
Fz
Fy
Fx
SHEET 2 OF 3
ERECTION, ALTERATION OR REMOVAL OF SUPPORTING STRUCTURE FOR A SOLAR WATER HEATING SYSTEM ON-GRADE OR ON A SLAB (OTHER THAN A CANTILEVERED SLAB)
MINOR WORKS ITEM 3.14
2010/10

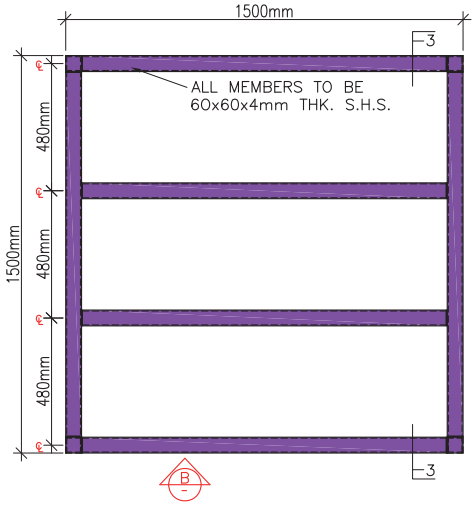

SUPPORTING FRAME LAYOUT PLAN
(CASE 2: ON SLAB)

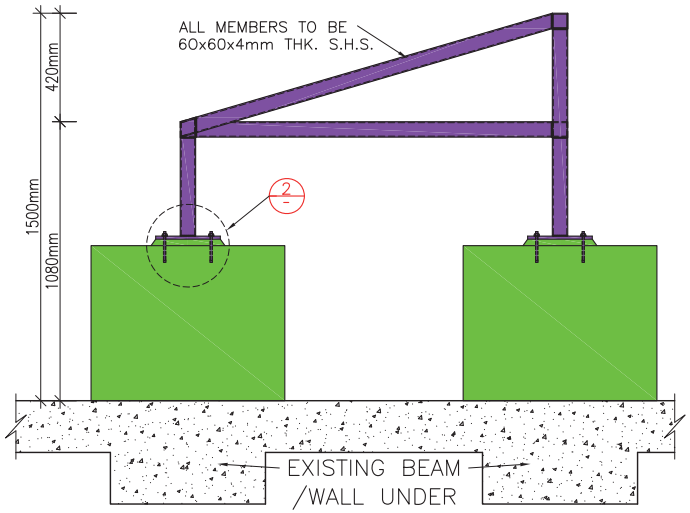

VIEW B

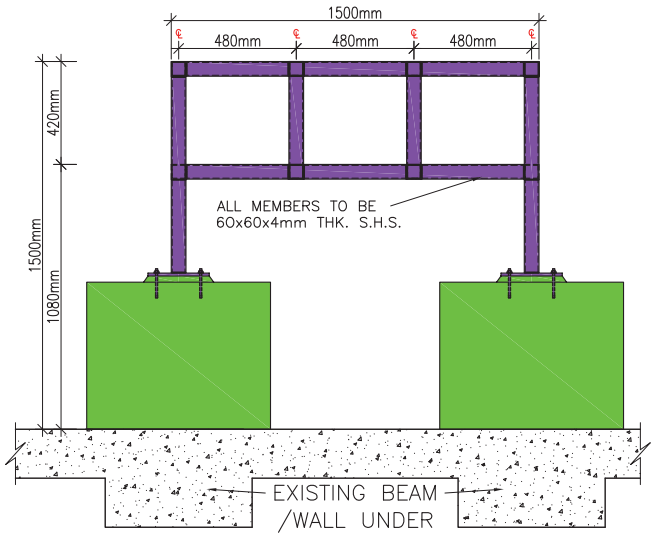

SECTION 3 – 3

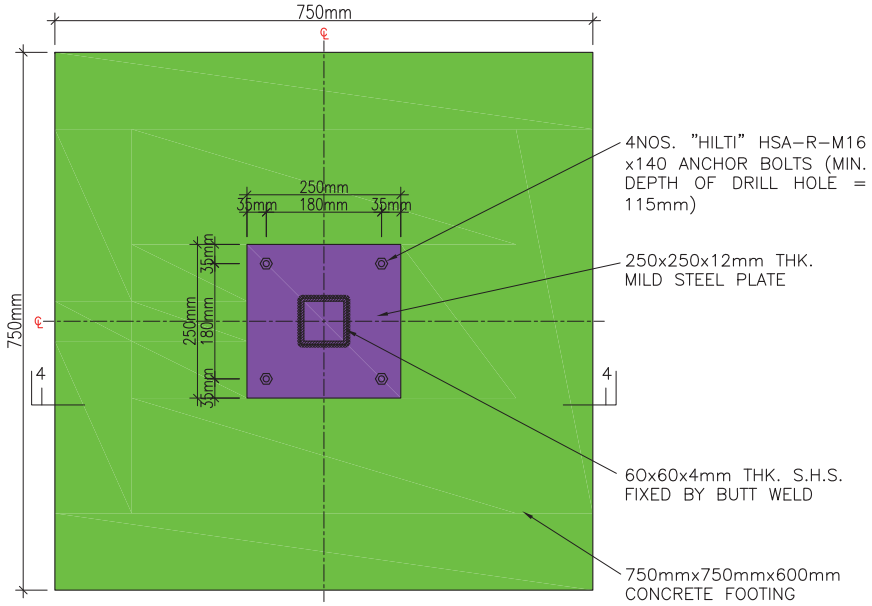

DETAIL 2

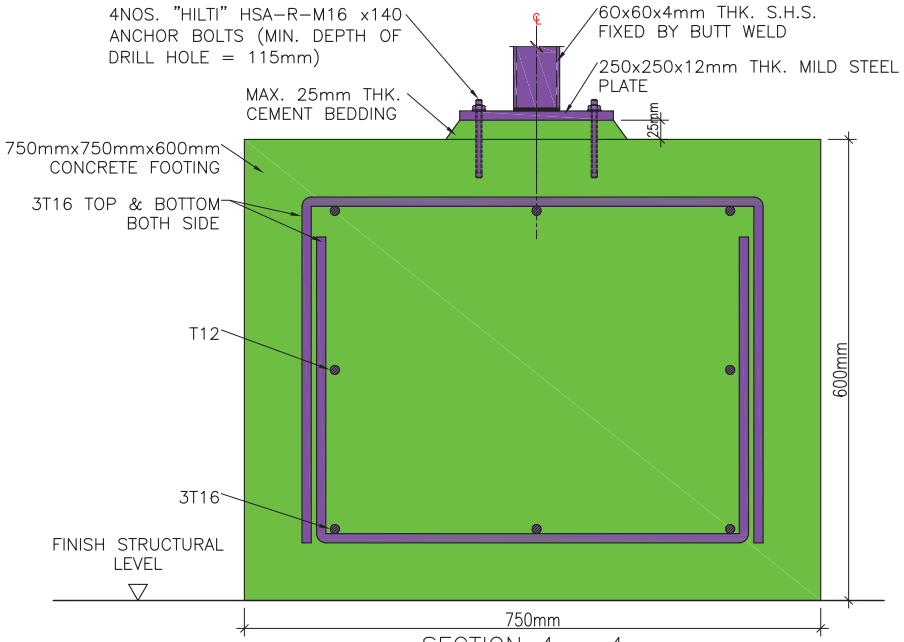

SECTION 4 – 4

MINOR WORKS ITEM 3.14	ERECTION, ALTERATION OR REMOVAL OF SUPPORTING STRUCTURE FOR A SOLAR WATER HEATING SYSTEM ON-GRADE OR ON A SLAB (OTHER THAN A CANTILEVERED SLAB)	SHEET 3 OF 3

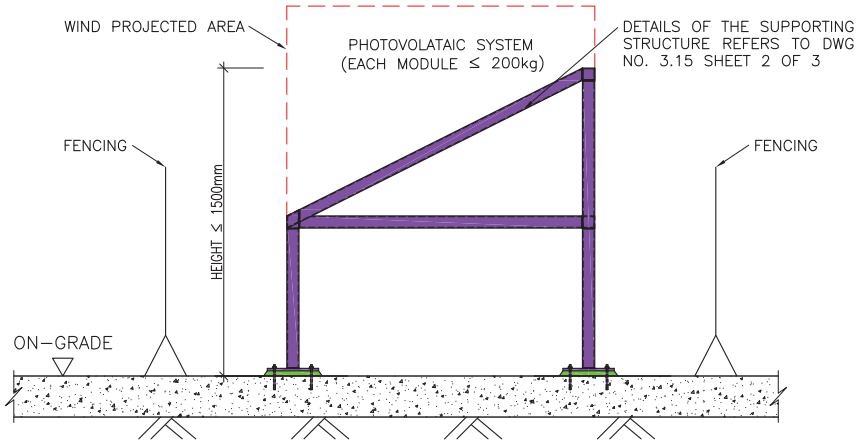

CASE 1: ERECTION OF SUPPORTING STRUCTURE ON–GRADE

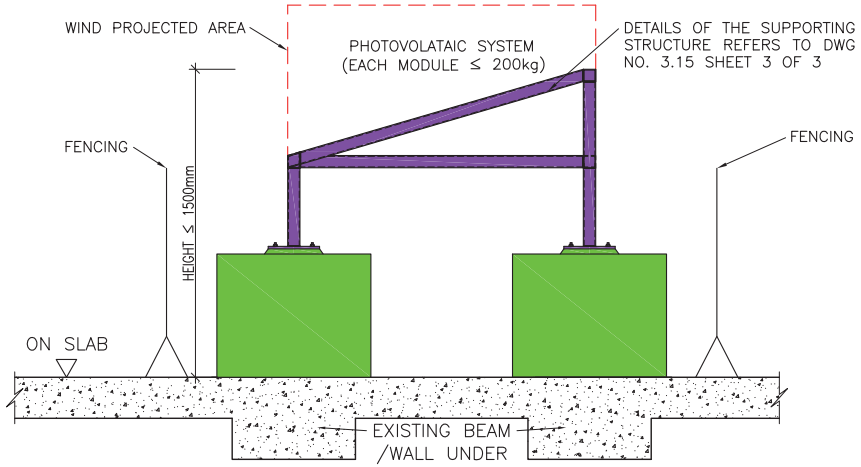

CASE 2: ERECTION OF SUPPORTING STRUCTURE ON A SLAB

GENERAL NOTES :

1. The works carried out shall comply with the Buildings Ordinance and the provisions of other enactment. (Reference can be made to the examples listed in Sections 3 and 10 of the Guidelines.)
2. All works shall comply with the following CoP/ standards:
   - Building (Construction) Regulations 1997
   - Code of Practice on Wind Effects in Hong Kong 2004
   - Code of Practice for the Structural Use of Steel 2005
   - Code of Practice for the Structural Use of Concrete 2004
   - Code of Practice for Foundations
3. All structural steel to be grade S275 class 1 to BS EN 10210 and shall be hot dip galvanized to BS EN ISO 1461.
4. All connections to be butt weld with weld strength, pw = 220 N/mm² to BS EN 1011 and all electrodes to BS EN ISO 2560.
5. All anchor bolts to be Hilti HSA–R M16 and shall be installed according to the manufacturer's specification.
6. All concrete works shall comply with CS1.
7. Existing concrete grade is assumed to be Grade 30 with 75 mm concrete cover.
8. Steel reinforcement shall comply with CS2:1995 and to be high yield type II deformed bar with the characteristic strength of 460 N/mm².
9. Minimum anchorage and lap length to be 600mm unless otherwise specified.
10. Minimum allowable ground pressure to be 50 kN/m².
11. All steel members shall be protected with one coat of "SIKA UNITHERM 38091 EXTERIOR" fire resistance paint or equivalent to the manufacturer's specification with thickness of 1.5mm (Hp/A = 175).
12. The design is valid subject to structural adequacy of existing parent structure otherwise scheme involving stiffening/ spreader beams etc. may be necessary.

DESIGN LOADS :

1. Dead Load = 1.0kN/m²
2. Live Load = 0.5kN/m²
3. Wind Load = 1.82kN/m² with force coeff. 2.0 (< 5m above site ground level) or 3.64 kN/m² with force coeff. 2.0 on roof (< 100m above site area)

PREPARATION WORKS :

1. Obtain the original design drawings/ information for reference prior to the commencement of works.
2. Carry out condition survey of the parent structure/ existing condition prior to the commencement of works.
3. Obtain the original deign of the approved structure for reference of any required reinstatement works.
4. The structural adequacy of the supporting parent structure due to the additional installation of minor works must be checked to satisfaction of structural requirement prior to the carrying out of minor works.

SAFETY AND PRECAUTIONARY MEASURES :

1. Fence–off the working area from the public. Diversion arrangement shall be taken if necessary.
2. No accumulation of demolition parts should be stored on roof.

WORKING PROCEDURES :

A. Erection
   1. Erect the supporting structure as per the drawing.
   2. Make good and reinstate the affected area (including waterproofing layer) of the parent building and clean the site.

B. Alteration
   1. Disconnect all electrical cable or wires and remove the existing photovoltaic system.
   2. Erect the additional steel member(s) from the steel bracket(s) to the designed strengthening point(s) of the supporting structure by welding.
   3. Make good and reinstate the affected area (including waterproofing layer) of the parent building and clean the site.

C. Removal
   1. Disconnect all electrical cable or wires and remove the existing photovoltaic system.
   2. Cut the supporting structure into manageable size by hand–held tools or machine and retrieve for construction waste disposal.
   3. Make good and reinstate the affected area (including waterproofing layer) of the parent building and clean the site.

Remarks: These cases exclude item 12 of the Designated Exempted Works.

MINOR WORKS ITEM 3.15	ERECTION, ALTERATION OR REMOVAL OF SUPPORTING STRUCTURE FOR A PHOTOVOLTAIC SYSTEM ON-GRADE OR ON A SLAB (OTHER THAN A CANTILEVERED SLAB)	SHEET 1 OF 3

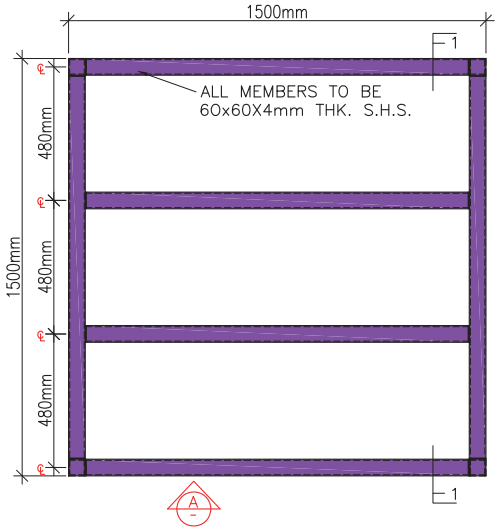

SUPPORTING FRAME LAYOUT PLAN
(CASE 1: ON–GRADE)

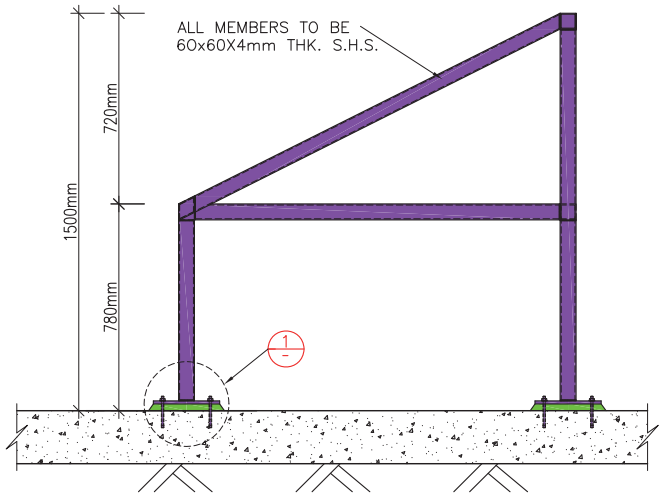

VIEW A

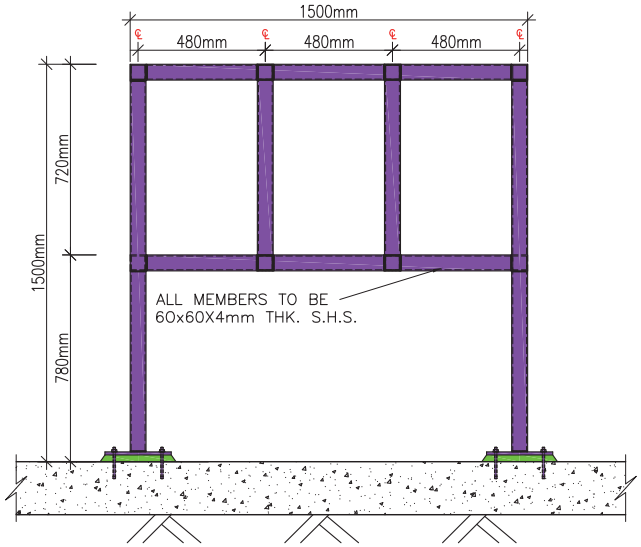

SECTION 1 – 1

DESIGN FORCES (UNFACTORED LOAD):

F_x = +/– 3kN (HORIZONTAL DIR.)
F_y = 8kN COMPRESSION OR
6kN TENSION (IN VERTICAL DIR.)
F_z = +/– 3kN (HORIZONTAL DIR.)

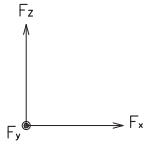

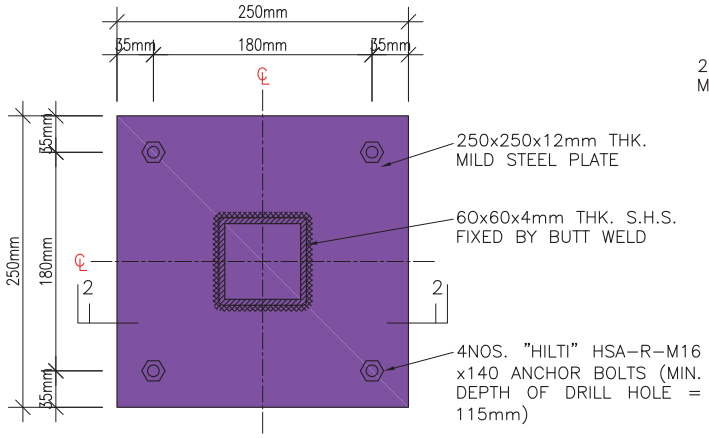

DETAIL 1

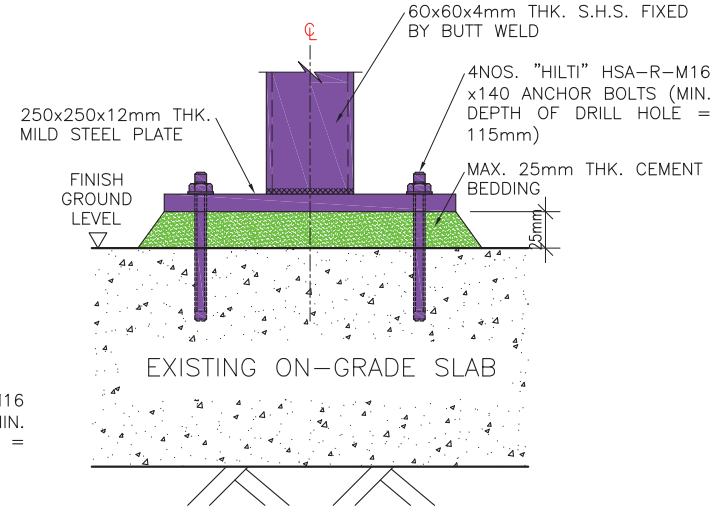

SECTION 2 – 2

MINOR WORKS ITEM 3.15	ERECTION, ALTERATION OR REMOVAL OF SUPPORTING STRUCTURE FOR A PHOTOVOLTAIC SYSTEM ON-GRADE OR ON A SLAB (OTHER THAN A CANTILEVERED SLAB)	SHEET 2 OF 3

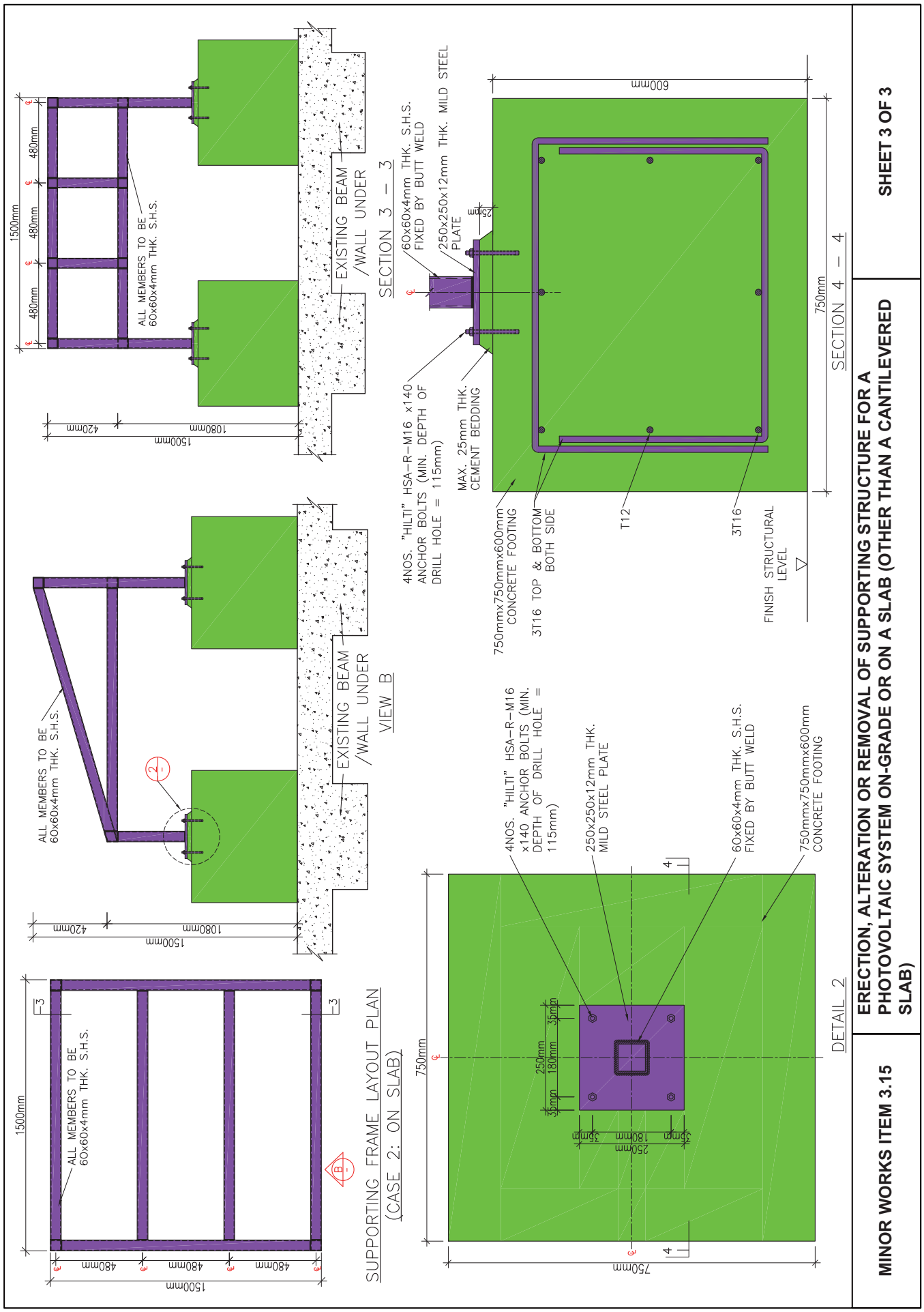
1500mm
480mm
480mm
480mm
ALL MEMBERS TO BE 60x60x4mm THK. S.H.S.
EXISTING BEAM /WALL UNDER
SECTION 3 – 3
1500mm
1080mm
420mm
60x60x4mm THK. S.H.S. FIXED BY BUTT WELD
250x250x12mm THK. MILD STEEL PLATE
25mm
4NOS. "HILTI" HSA-R-M16 x140 ANCHOR BOLTS (MIN. DEPTH OF DRILL HOLE = 115mm)
MAX. 25mm THK. CEMENT BEDDING
600mm
750mm
SECTION 4 – 4
750mmx750mmx600mm CONCRETE FOOTING
3T16 TOP & BOTTOM BOTH SIDE
T12
3T16
FINISH STRUCTURAL LEVEL
ALL MEMBERS TO BE 60x60x4mm THK. S.H.S.
EXISTING BEAM /WALL UNDER
VIEW B
1500mm
1080mm
420mm
4NOS. "HILTI" HSA-R-M16 x140 ANCHOR BOLTS (MIN. DEPTH OF DRILL HOLE = 115mm)
250x250x12mm THK. MILD STEEL PLATE
60x60x4mm THK. S.H.S. FIXED BY BUTT WELD
750mmx750mmx600mm CONCRETE FOOTING
ALL MEMBERS TO BE 60x60x4mm THK. S.H.S.
1500mm
480mm
480mm
480mm
1500mm
SUPPORTING FRAME LAYOUT PLAN
(CASE 2: ON SLAB)
750mm
250mm
180mm
35mm
750mm
DETAIL 2
SHEET 3 OF 3
ERECTION, ALTERATION OR REMOVAL OF SUPPORTING STRUCTURE FOR A PHOTOVOLTAIC SYSTEM ON-GRADE OR ON A SLAB (OTHER THAN A CANTILEVERED SLAB)
MINOR WORKS ITEM 3.15

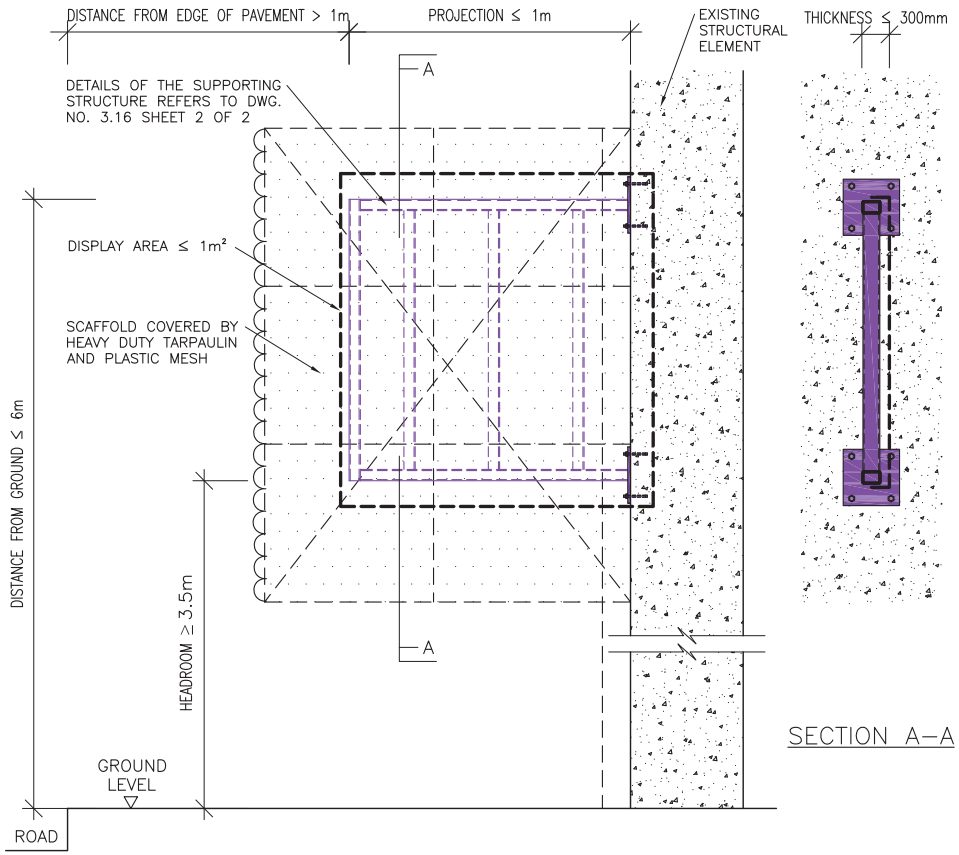

ERECTION OF PROJECTING SIGNBOARD

GENERAL NOTES :

1. The works carried out shall comply with the Buildings Ordinance and the provisions of other enactment. (Reference can be made to the examples listed in Sections 3 and 10 of the Guidelines.)
2. All works shall comply with the following CoP/ standards:
   - Building (Construction) Regulations
   - Code of Practice on Wind Effects in Hong Kong 2004
   - Code of Practice for the Structural Use of Steel 2005
   - Code of Practice for the Structural Use of Concrete 2004
3. All structural steel to be grade S275 class 1 to BS EN 10210 and shall be hot dip galvanized to BS EN ISO 1461.
4. All connections to be 4 mm fillet weld all round with weld strength, pw = 220 N/mm² to BS EN 1011 and all electrodes to BS EN ISO 2560.
5. All anchors bolt to be Hilti HSA–R M16 and shall be installed according to the manufacturer's specification.
6. Concrete grade of the existing reinforced concrete column is assumed to be Grade 20 with a minimum thickness of 400mm.
7. All steel members shall be protected with one coat of "UNITHERM 38091" fire resistance paint with thickness of 1.5mm (Hp/A = 175).
8. All banners should be made of non–combustible material.
9. Tolerances such as lack of fit, hole diameter and dimensions etc shall be allowed in accordance with the provision of "Code of Practice for the Structural Use of Steel 2005".

DESIGN LOADS :

1. Dead Load = 1.00kN/m² (Including cladding)
2. Wind Load = 2.01kN/m² with total pressure coefficient 2.0

PREPARATION WORKS:

1. Obtain the existing design drawings/ information of the signboard for reference.
2. Carry out condition survey of the parent structure/ existing condition prior to the commencement of works.
3. If the signboard consists of light emitting diodes, disconnect the power to the signboard before the commencement of works.
4. Obtain the original design of the approved structure for reference of any required reinstatement works.
5. The structural adequacy of the supporting parent structure due to the additional installation of minor works must be checked to the satisfaction of structural requirement prior to the carrying out of minor works.
6. Plastering or rendering should be removed to expose concrete face before installation of anchor bolts and base plate.

SAFETY AND PRECAUTIONARY MEASURES :

1. Fence–off the working area from the public. Diversion arrangement shall be taken if necessary.
2. Bamboo scaffolds details shall refer to the following figure as shown on drawing no. GN–1.
   - Figure 4 Working platform on a double–row bamboo scaffold
   - Figure 5 Bamboo scaffold for signboard

WORKING PROCEDURES :

A. Erection

1. Install the signboard as per the drawing.
2. Make good and reinstate the affected areas of the parent building.
3. Dismantle the bamboo scaffold and clean the site.

B. Alteration

1. Remove the display surface/ loose parts from the signboard.
2. Remove the defective member and replace with a new member of the same size.
3. Make good and reinstate the affected areas of the parent building.
4. Dismantle the bamboo scaffold and clean the site.

C. Removal

1. Remove the display surface/ loose parts from the signboard.
2. Remove the supporting frame of the signboard by cutting the member into smaller size for construction waste disposal.
3. The removal works shall commence from the outmost side to the supporting ends at the parent structure.
4. Make good and reinstate the affected areas of the parent building.
5. Dismantle the bamboo scaffold and clean the site.

MINOR WORKS ITEM 3.16	ERECTION, ALTERATION OR REMOVAL OF PROJECTING SIGNBOARD (INCLUDING THE REPLACEMENT OF THE DISPLAY SURFACE OF SIGNBOARD)	SHEET 1 OF 2

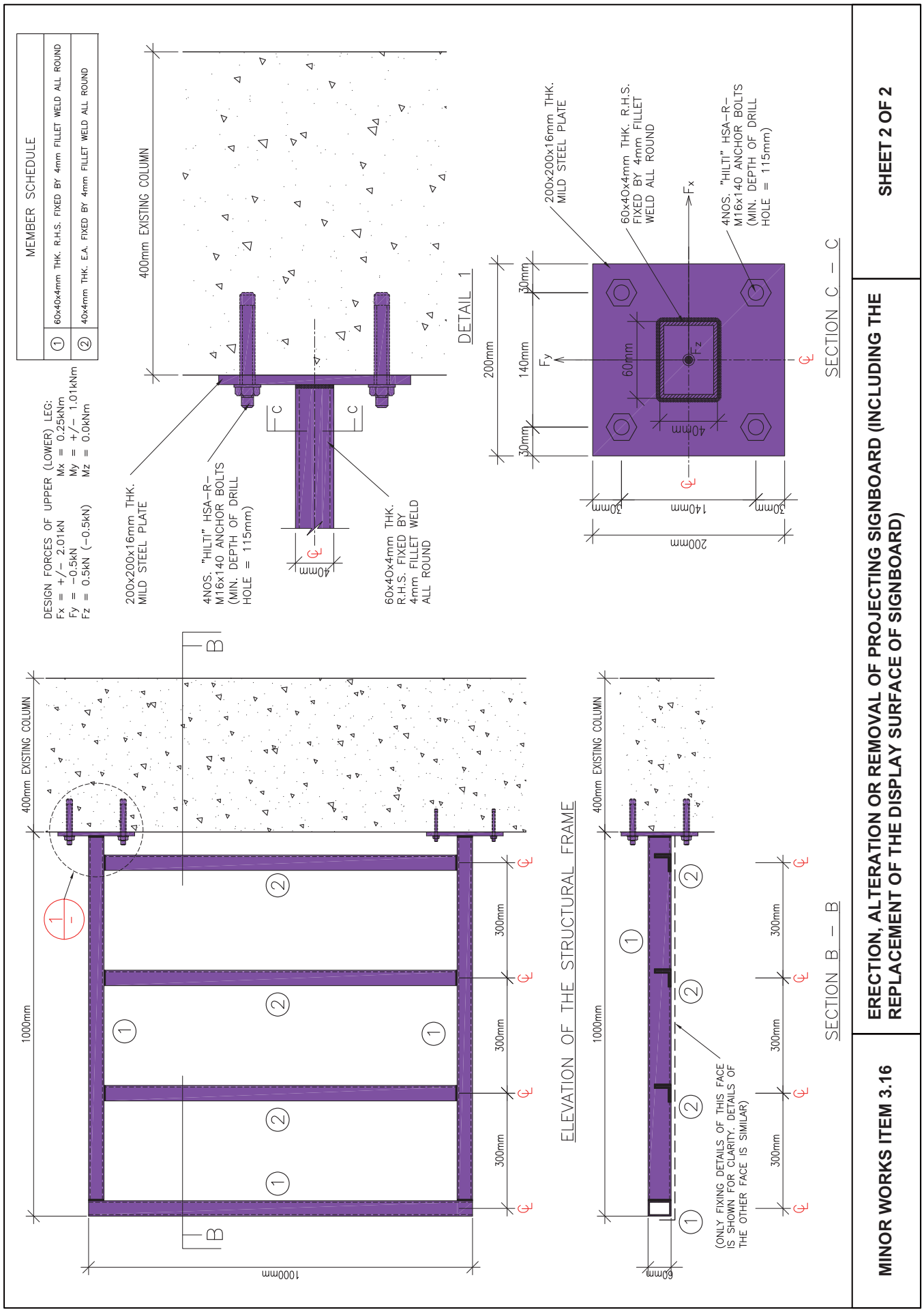
MEMBER SCHEDULE
1 60x40x4mm THK. R.H.S. FIXED BY 4mm FILLET WELD ALL ROUND
2 40x4mm THK. E.A. FIXED BY 4mm FILLET WELD ALL ROUND
DESIGN FORCES OF UPPER (LOWER) LEG:
Fx = +/– 2.01kN Mx = 0.25kNm
Fy = –0.5kN My = +/– 1.01kNm
Fz = 0.5kN (–0.5kN) Mz = 0.0kNm
400mm EXISTING COLUMN
200x200x16mm THK. MILD STEEL PLATE
4NOS. "HILTI" HSA–R–M16x140 ANCHOR BOLTS (MIN. DEPTH OF DRILL HOLE = 115mm)
60x40x4mm THK. R.H.S. FIXED 4mm FILLET WELD ALL ROUND
40mm
DETAIL 1
200mm
140mm
30mm
60mm
Fx
Fy
Fz
SECTION C – C
1000mm
300mm
ELEVATION OF THE STRUCTURAL FRAME
(ONLY FIXING DETAILS OF THIS FACE IS SHOWN FOR CLARITY. DETAILS OF THE OTHER FACE IS SIMILAR)
SECTION B – B
SHEET 2 OF 2
ERECTION, ALTERATION OR REMOVAL OF PROJECTING SIGNBOARD (INCLUDING THE REPLACEMENT OF THE DISPLAY SURFACE OF SIGNBOARD)
MINOR WORKS ITEM 3.16

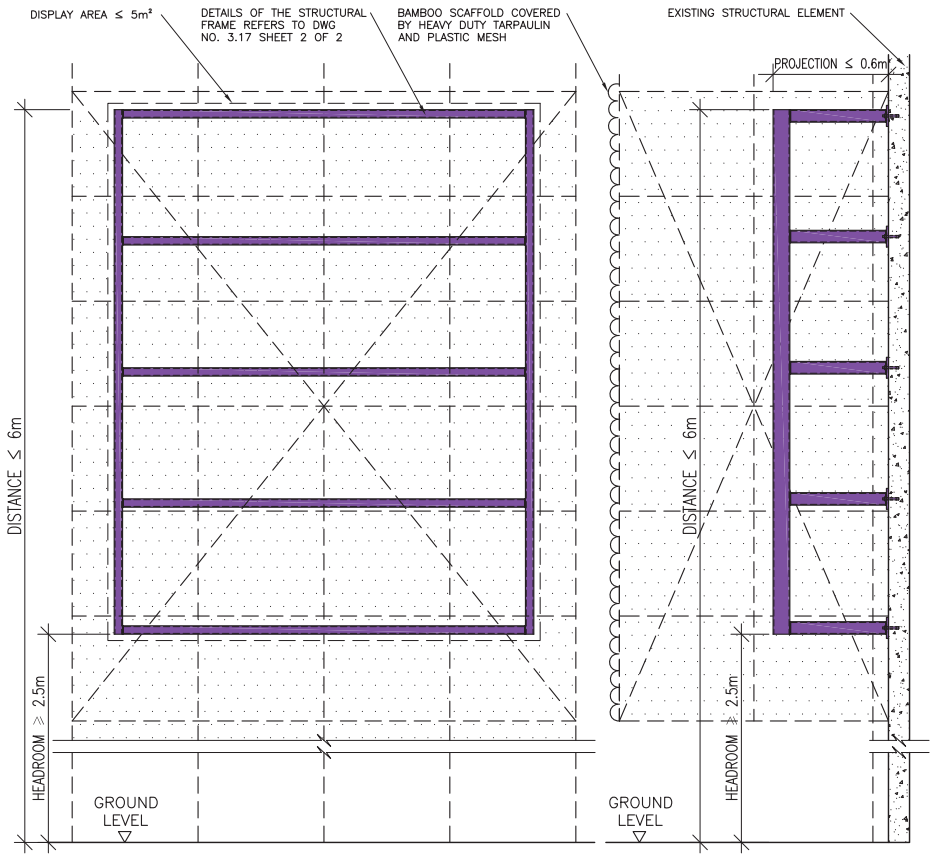

FRONT ELEVATION

SIDE ELEVATION

Wall signboards at overhead of shopfront should have :

(i) a minimum clearance of 2.5m from ground ; and
(ii) be structurally independent without supporting any roller shutter or air–conditioning unit or being used for storage.

GENERAL NOTES :

1. The works carried out shall comply with the Buildings Ordinance and the provisions of other enactment. (Reference can be made to the examples listed in Sections 3 and 10 of the Guidelines.)
2. All works shall comply with the following CoP/ standards:
   - Building (Construction) Regulations
   - Code of Practice on Wind Effects in Hong Kong 2004
   - Code of Practice for Structural Use of Steel 2005
3. All structural steel to be grade S275 to BS EN 10210 and shall be hot dip galvanized to BS EN ISO 1461.
4. All connections to be 4mm fillet weld all round or butt weld with weld strength, pw = 220 N/mm² unless otherwise specified.
5. All anchor bolts to be Hilti HSA–R–M10 and shall be installed according to the manufacturer's specification.
6. Existing concrete grade and minimum wall thickness are assumed to be Grade 20 and 100 mm respectively.
7. All removal of existing concrete shall be carried out by using of hand–held tools carefully.
8. All existing reinforcement should not be damaged.
9. All steel members shall be protected with one coat of "UNITHERM 38091" fire resistance paint with thickness of 1.5mm (Hp/A = 175).
10. All banner should be made of non–combustible material.
11. Tolerances such as lack of fit, hole diameter and dimensions etc shall be allowed in accordance with the provision of "Code of Practice for the Structural Use of Steel 2005".

DESIGN LOADS :

1. Dead Load = 0.2kN/m²
2. Live Load = 1.00kN/m
3. Wind Load = 2.01kN/m² with total pressure coeff. 1.4

PREPARATION WORKS :

1. Obtain the existing design drawings/ information of the signboard for reference.
2. Carry out condition survey of the parent structure/ existing condition prior to the commencement of works.
3. Obtain the original design of the approved structure for reference of any required reinstatement works.
4. The structural adequacy of the supporting parent structure due to the additional installation of minor works must be checked to the satisfaction of structural requirement prior to the carrying out of the minor works.
5. Plastering or rendering should be removed to expose concrete face before installation of anchor bolts and base plate.

SAFETY AND PRECAUTIONARY MEASURES :

1. Fence–off the working area from the public. Diversion arrangement shall be taken if necessary.
2. Bamboo scaffolds details shall refer to the following figures as shown on drawing no. GN–1.
   - Figure 4 Working platform on a double–row bamboo scaffold
   - Figure 5 Bamboo scaffold for signboard

WORKING PROCEDURES :

A. Erection

1. Install the signage as per drawing NO. 3.17 SHEET 2 OF 2.

B. Alteration

1. Remove the display surface and replace with a new one using the same fixing method.
2. Dismantle bamboo scaffold and clean the site.

C. Removal

1. Remove the display surface/ loose parts from the signboard.
2. Remove the supporting frame of the signboard by cutting the member into smaller size for construction waste disposal.
3. The removal works shall commence from the top to the bottom.
4. Make good and reinstate the affected areas of the parent building.
5. Dismantle the bamboo scaffold and clean the site.

Remarks :

1. This case excludes item 10 or 11 of the Designated Exempted Works.
2. This item excludes signboard comprising of display system with light emitting diodes.

MINOR WORKS ITEM 3.17	ERECTION, ALTERATION OR REMOVAL OF WALL SIGNBOARD (INCLUDING THE REPLACEMENT OF THE DISPLAY SURFACE)	SHEET 1 OF 2

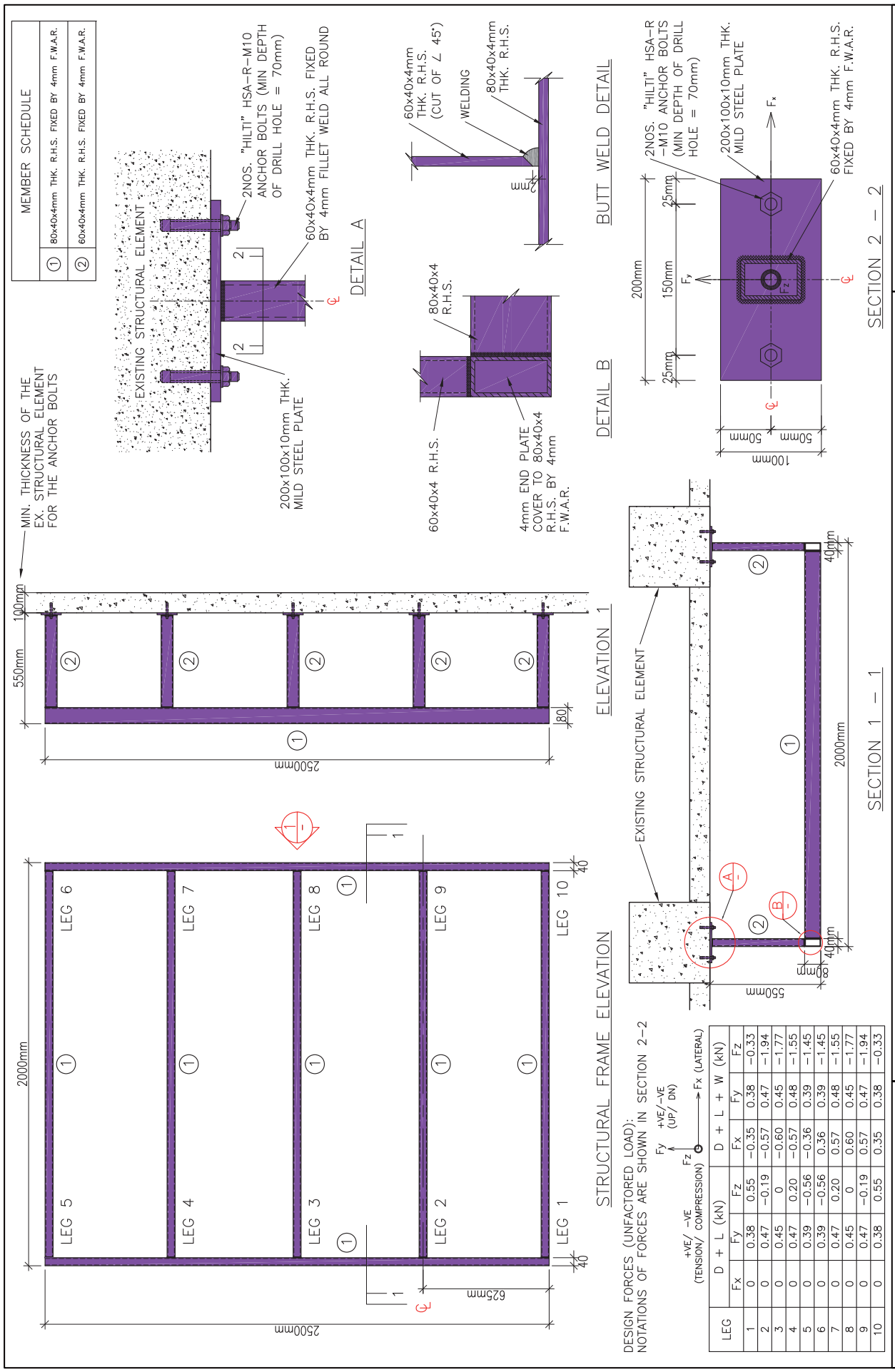

LEG	D + L (kN)			D + L + W (kN)		
	Fx	Fy	Fz	Fx	Fy	Fz
1	0	0.38	0.55	−0.35	0.38	−0.33
2	0	0.47	−0.19	−0.57	0.47	−1.94
3	0	0.45	0	−0.60	0.45	−1.77
4	0	0.47	0.20	−0.57	0.48	−1.55
5	0	0.39	−0.56	−0.36	0.39	−1.45
6	0	0.39	−0.56	0.36	0.39	−1.45
7	0	0.47	0.20	0.57	0.48	−1.55
8	0	0.45	0	0.60	0.45	−1.77
9	0	0.47	−0.19	0.57	0.47	−1.94
10	0	0.38	0.55	0.35	0.38	−0.33

2010/10

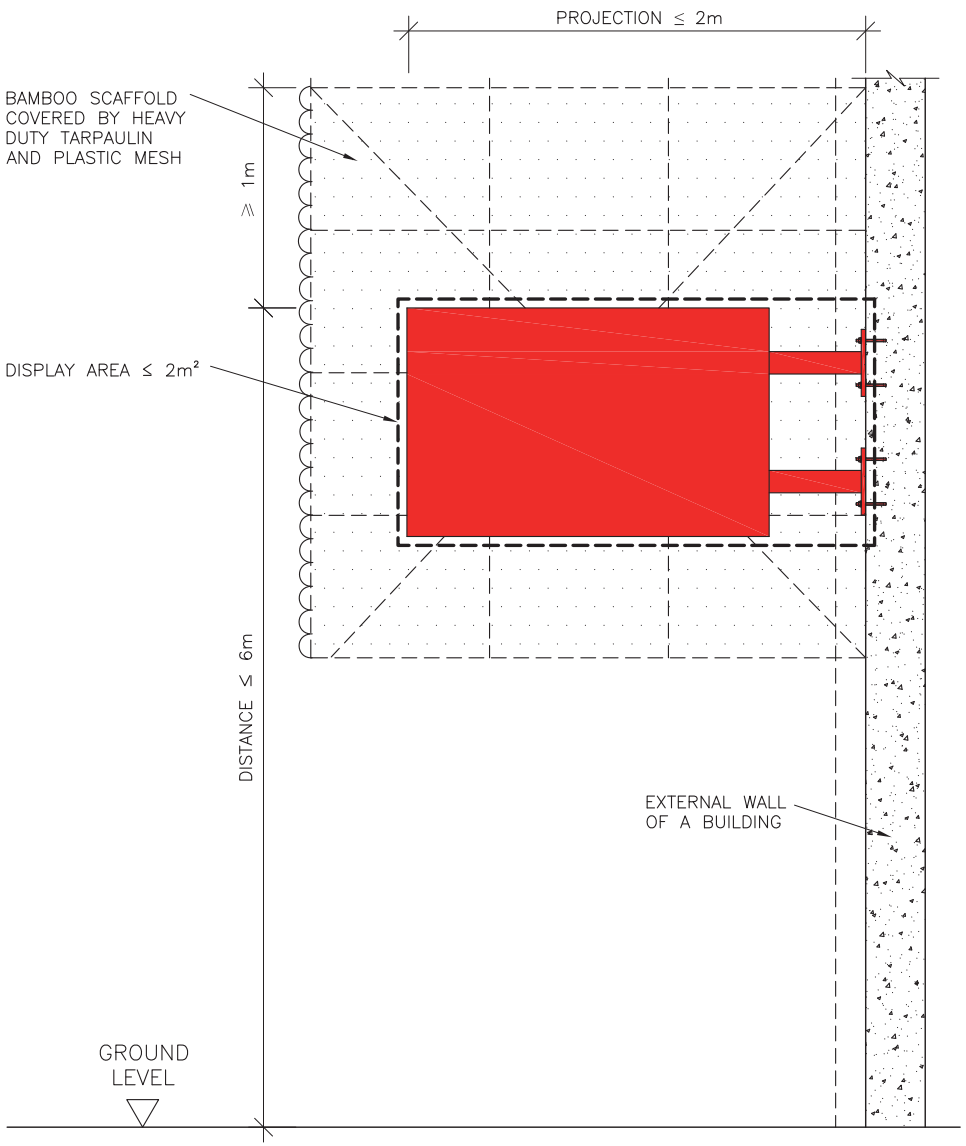

GENERAL NOTES :

The works carried out shall comply with the Buildings Ordinance and the provisions of other enactment. (Reference can be made to the examples listed in Sections 3 and 10 of the Guidelines.)

PREPARATION WORKS :

1. Obtain the existing design drawings/ information of the signboard for reference.
2. Carry out condition survey of the parent structure/ existing condition prior to the commencement of works.
3. If the signboard consists of light emitting diodes, disconnect the power connected to the signboard before commencement of works.
4. Obtain the original design of the approved structure for reference of any required reinstatement works.

SAFETY AND PRECAUTIONARY MEASURES :

1. Fence–off the working area from the public. Diversion arrangement shall be taken if necessary.
2. Bamboo scaffolds details shall refer to the following figure as shown on drawing no. GN–1.
   - Figure 5 Bamboo scaffold for signage

WORKING PROCEDURES :

1. Remove the display surface/ loose parts from the signboard.
2. Remove the supporting frame of the signboard by cutting the member into smaller size for construction waste disposal
3. The removal works shall commence from the outmost side to the supporting ends at the parent structure.
4. Make good and reinstate the affected areas of the parent building.
5. Dismantle the bamboo scaffold and clean the site.

MINOR WORKS ITEM 3.18	REMOVAL OF PROJECTING SIGNBOARD

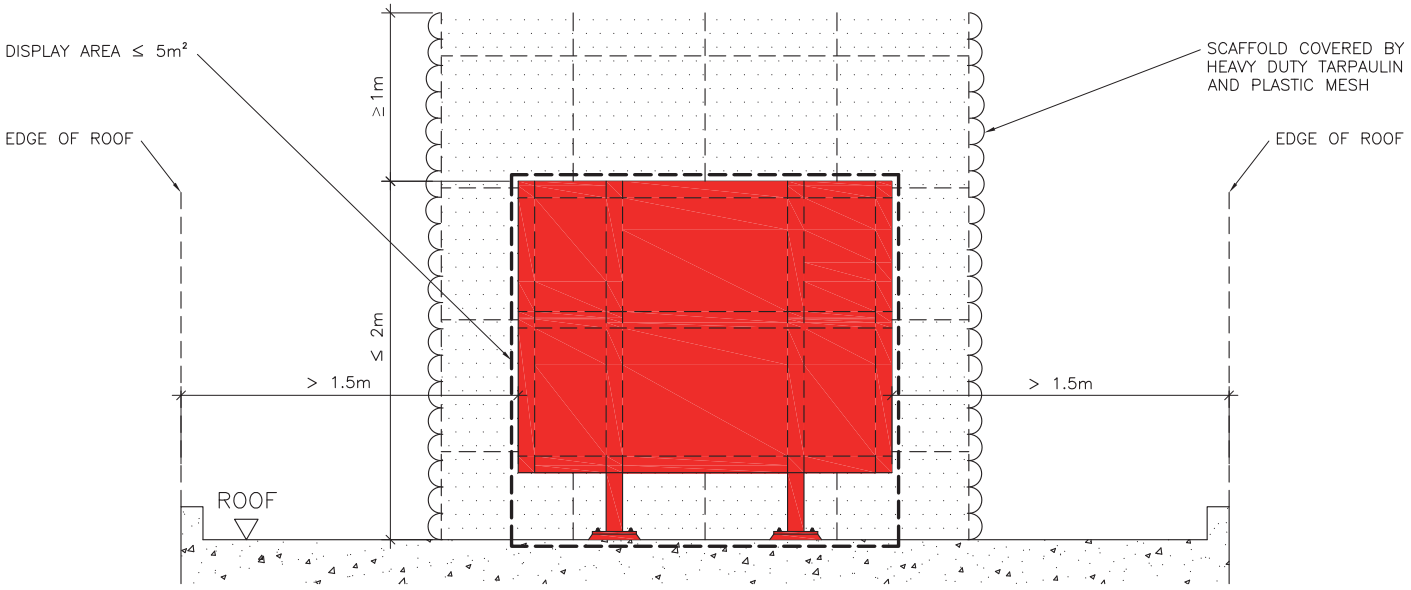

GENERAL NOTES :

The works carried out shall comply with the Buildings Ordinance and the provisions of other enactment. (Reference can be made to the examples listed in Sections 3 and 10 of the Guidelines.)

PREPARATION WORKS :

1. Obtain the existing design drawings/ information of the signboard for reference.
2. Carry out condition survey of the parent structure/ existing condition prior to the commencement of works.
3. If the signboard consists of light emitting diodes, disconnect the power connected to the signboard before commencement of works.
4. Obtain the original design of the approved structure for reference of any required reinstatement works.

SAFETY AND PRECAUTIONARY MEASURES :

1. Fence–off the working area from the public. Diversion arrangement shall be taken if necessary.
2. Bamboo scaffolds details shall refer to the following figure as shown on drawing no. GN–1.
   - Figure 4 Working platform on a double–row bamboo scaffold

WORKING PROCEDURES :

1. Remove the display surface/ loose parts from the signboard.
2. Remove the supporting frame of the signboard by cutting the member into smaller size for construction waste disposal.
3. The removal works shall commence from the top to the bottom.
4. Make good and reinstate the affected areas(including waterproofing works) of the parent building.
5. Dismantle the bamboo scaffold and clean the site.

MINOR WORKS ITEM 3.19	REMOVAL OF SIGNBOARD LOCATED ON THE ROOF OF A BUILDING

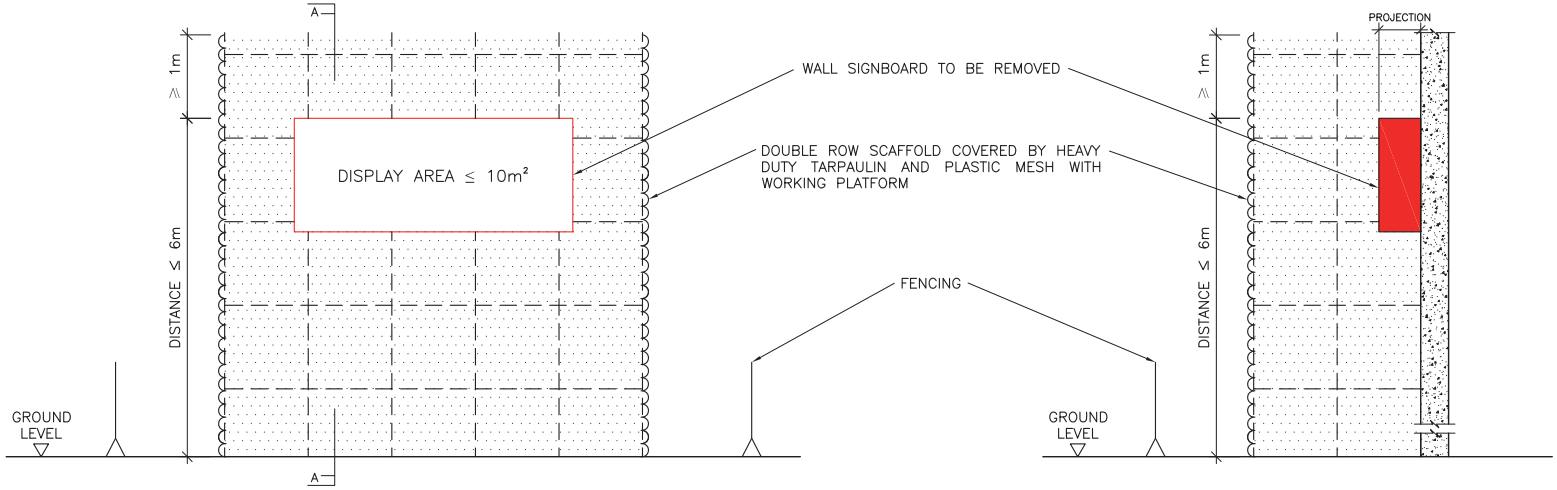

ELEVATION

SECTION A–A

GENERAL NOTES :

The works carried out shall comply with the Buildings Ordinance and the provisions of other enactment. (Reference can be made to the examples listed in Sections 3 and 10 of the Guidelines.)

PREPARATION WORKS :

1. Obtain the existing design drawings/ information of the signboard for reference.
2. Carry out condition survey of the parent structure/ existing condition prior to the commencement of works.
3. Obtain the original design of the approved structure for reference of any required reinstatement works.

SAFETY AND PRECAUTIONARY MEASURES :

1. Fence–off the working area from the public. Diversion arrangement shall be taken if necessary.
2. Bamboo scaffolds details shall refer to the following figure as shown on drawing no. GN–1.
   - Figure 4 Working platform on a double–row bamboo scaffold

WORKING PROCEDURES :

1. Remove the display surface/ loose parts from the signboard.
2. Remove the supporting frame of the signboard by cutting the member into smaller size for construction waste disposal.
3. The removal works shall commence from the top to the bottom.
4. Make good and reinstate the affected areas of the parent building.
5. Dismantle the bamboo scaffold and clean the site.

Remarks :

1. This case excludes item 11 of the Designated Exempted Works.
2. This item excludes signboard comprising of display system with light emitting diodes.

MINOR WORKS ITEM 3.20	REMOVAL OF WALL SIGNBOARD

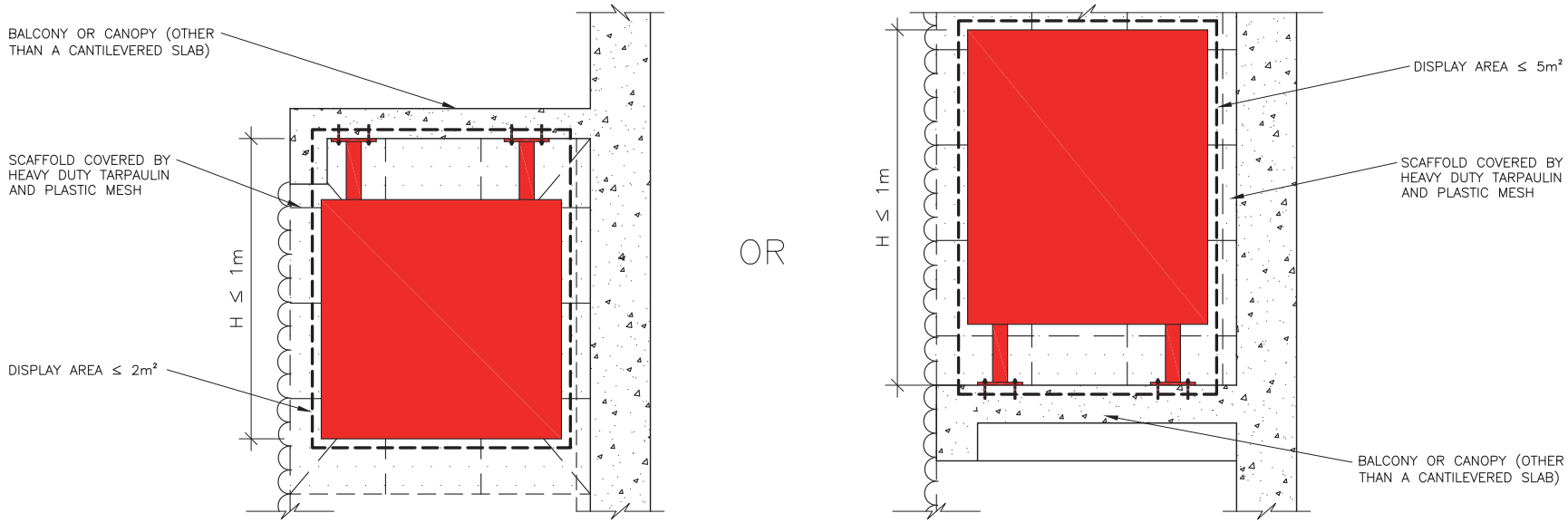

CASE 1: HUNG UNDERNEATH

CASE 2: LOCATED ON

GENERAL NOTES :

The works carried out shall comply with the Buildings Ordinance and the provisions of other enactment. (Reference can be made to the examples listed in Sections 3 and 10 of the Guidelines.)

PREPARATION WORKS :

1. Obtain the existing design drawings/ information for reference.
2. If the signboard consists of light emitting diodes, disconnect all the power connected to the signboard before the commencement of any works on site.
3. Carry out condition survey of the parent structure/ existing condition prior to the commencement of works.
4. Obtain the original design of the approved structure for reference of any required reinstatement works.

SAFETY AND PRECAUTIONARY MEASURES :

1. Fence–off the working area from the public. Diversion arrangement shall be taken if necessary.
2. Bamboo scaffolds details shall refer to the following figures as shown on drawing no. GN–1.
   - Figure 4 Working platform on a double–row bamboo scaffold
   - Figure 5 Bamboo scaffold for signboard

WORKING PROCEDURES :

1. Remove the display surface/ loose parts from the signboard.
2. Remove the hanging down sign by cutting the member into smaller size from the bottom to the top for construction waste disposal or remove the supporting frame of the signboard in case 2 by cutting the member into smaller size from the top to the bottom for construction waste disposal.
3. Make good and reinstate the affected areas (including waterproofing) of the parent building.
4. Dismantle the bamboo scaffold and clean the site.

MINOR WORKS ITEM 3.21	REMOVAL OF SIGNBOARD LOCATED ON OR HUNG UNDERNEATH THE SOFFIT OF A BALCONY OR CANOPY (OTHER THAN A CANTILEVERED SLAB)

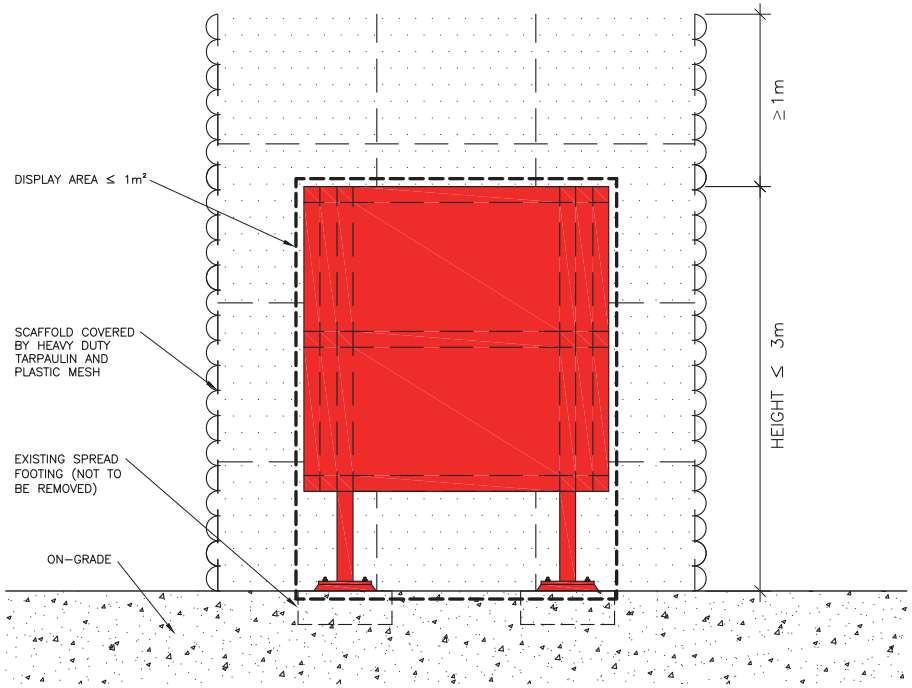

GENERAL NOTES :

The works carried out shall comply with the Buildings Ordinance and the provisions of other enactment. (Reference can be made to the examples listed in Section 3 and 10 of the Guidelines.)

PREPARATION WORKS :

1. Obtain the existing design drawings/ information of the signboard for reference.
2. Carry out condition survey of the parent structure/ existing condition prior to the commencement of works.
3. If the signboard consists of light emitting diodes, disconnect the power connected to the signboard before commencement of works.

SAFETY AND PRECAUTIONARY MEASURES :

1. Fence–off the working area from the public. Diversion arrangement shall be taken if necessary.
2. Bamboo scaffolds details shall refer to the following figure as shown on drawing no. GN–1.
   - Figure 4 Working platform on a double–row bamboo scaffold

WORKING PROCEDURES :

1. Remove the display surface/ loose parts from the signboard.
2. Remove the supporting frame of the signboard by cutting the member into smaller size for construction waste disposal.
3. The removal works shall commence from the top to the bottom.
4. Make good and reinstate the affected areas of the parent structure.
5. Dismantle the bamboo scaffold and clean the site.

MINOR WORKS ITEM 3.22	REMOVAL OF OUTDOOR SIGNBOARD FIXED ON-GRADE (OTHER THAN THE REMOVAL OF THE SPREAD FOOTING OF OUTDOOR SIGNBOARD)

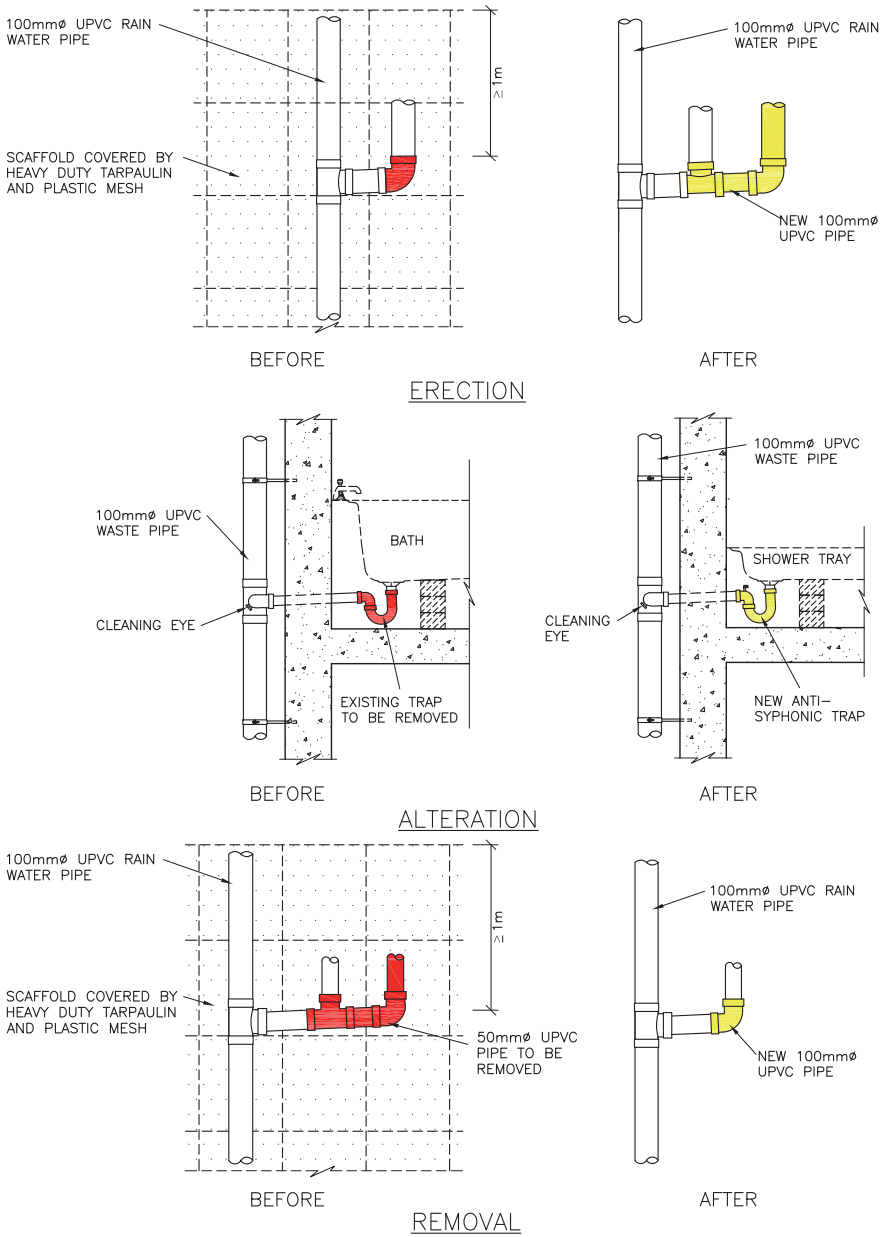

MATERIAL SPECIFICATION :

Plastic rainwater pipes and fittings to be UPVC to BS4576. Plastic soil and ventilating pipes and fittings to be UPVC to BS4514. Plastic waste pipes and fittings to be ABS, MUPVC, PP or PE based to BS5255. Plastic flushing water service pipes and fittings to be UPVC to BS3505 class D and BS4346: Pt. 1 and Pt. 2.

GENERAL NOTES :

1. The works carried out shall comply with the Buildings Ordinance and the provisions of other enactment. (Reference can be made to the examples listed in Sections 3 and 10 of the Guidelines.)
2. The requirements of PNAP APP–93 should be followed for the planning and design of drainage works.
3. The principals of PNAP APP–105 should be observed for protecting the structure against penetration of moisture or water at the design stage.

PREPARATION WORKS :

1. Obtain the existing design drawings/ information for reference prior to the commencement of works
2. Carry out condition survey of the parent structure/ existing condition prior to the commencement of works.
3. If the works would involve suspension of the drain system, inform the affected parties in advance.

SAFETY AND PRECAUTIONARY MEASURES :

1. Fence–off the working area from the public. Diversion arrangement shall be taken if necessary.
2. Bamboo scaffolds details shall refer to the following figures as shown on drawing no. GN–1.
   - Figure 2 Truss–out bamboo scaffold
   - Figure 4 Working platform on a double–row bamboo scaffold

WORKING PROCEDURES

A. Erection

1. Install the pipe work and fitting as per drawing.
2. Water test the pipe works to make sure that the work is properly done.
3. Make good and reinstate the works area affected by the works.
4. Remove the bamboo scaffold and clean the site.
5. Any removed pipe works shall be sprayed with diluted bleaching agent (bleaching agent: water = 1:99) and pack into plastic bag for construction waste disposal.

B. Alteration (E.g. Replacement of a bath tub with a shower tray)

1. Replace the pipe work and fitting as per drawing.
2. Water test the pipe works to make sure that the work is properly done.
3. Make good and reinstate the works area affected by the works.
4. Remove the bamboo scaffold and clean the site.
5. Any removed pipe works shall be sprayed with diluted bleaching agent (bleaching agent: water = 1:99) and pack into plastic bag for construction waste disposal.

C. Removal

1. Remove the pipe work and fitting as per drawing.
2. Make good and reinstate the works area affected by the works.
3. Remove the bamboo scaffold and clean the site.
4. Any removed pipe works shall be sprayed with diluted bleaching agent (bleaching agent: water = 1:99) and pack into plastic bag for construction waste disposal.

REMARKS :

1. No pipeworks of residential premise shall protrude into the private premises of the floor below.
2. The nominal diameter of every soil pipe from water closet fitments or slop sinks shall be not less than the diameter of the outlet of any of the fitments it serves.
3. For prevention of water seepage, the works do not involve any embedded pipe, other than a pipe that passes through a wall or slab following the guidelines in Appendix A of PNAP APP–105.

MINOR WORKS ITEM 3.23	ERECTION, ALTERATION OR REMOVAL OF ABOVEGROUND DRAIN

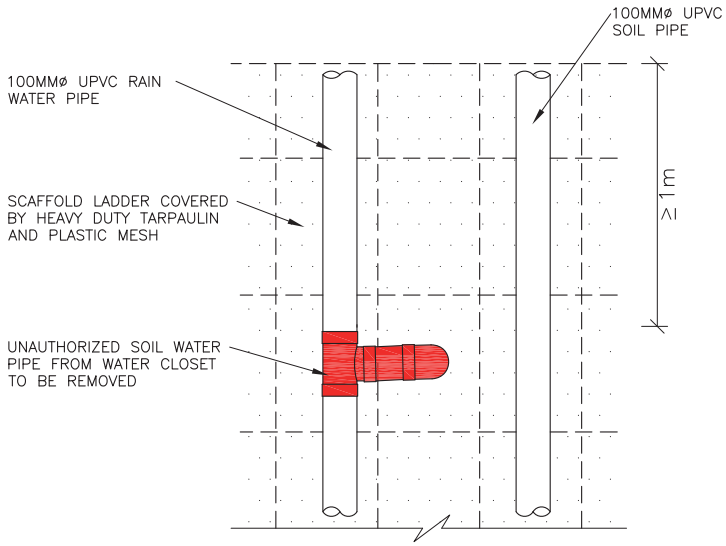

BEFORE

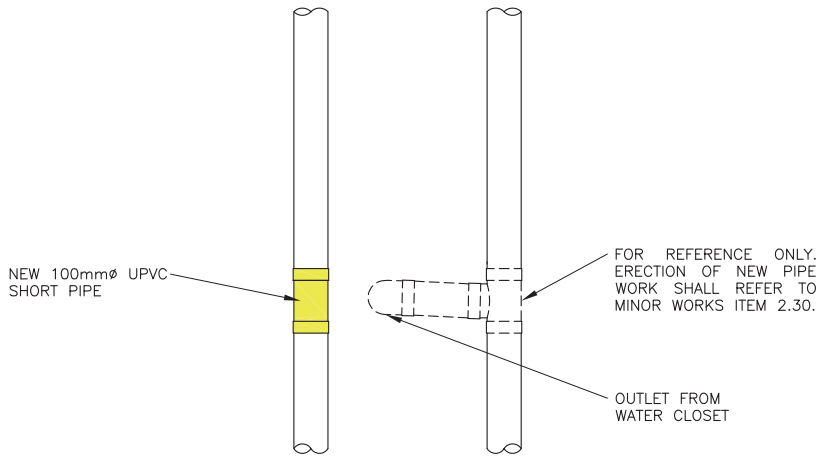

AFTER

MATERIAL SPECIFICATION :

Plastic rainwater pipes and fittings to be UPVC to BS4576. Plastic soil and ventilating pipes and fittings to be UPVC to BS4514. Plastic waste pipes and fittings to be ABS, MUPVC, PP or PE based to BS5255. Plastic flushing water service pipes and fittings to be UPVC to BS3505 class D and BS4346: Pt. 1 and Pt. 2.

GENERAL NOTES :

The works carried out shall comply with the Buildings Ordinance and the provisions of other enactment. (Reference can be made to the examples listed in Sections 3 and 10 of the Guidelines.)

PREPARATION WORKS :

1. Obtain the existing design drawings/ information for reference prior to the commencement of works
2. Carry out condition survey of the parent structure/ existing condition prior to the commencement of works.
3. If the works would involve suspension of the drain system, inform the affected parties in advance.

SAFETY AND PRECAUTIONARY MEASURES :

1. Fence–off the working area from the public. Diversion arrangement shall be taken if necessary.
2. Bamboo scaffolds details shall refer to the following figures as shown on drawing no. GN–1.
   - Figure 2 Truss–out bamboo scaffold
   - Figure 4 Working platform on a double–row bamboo scaffold

WORKING PROCEDURES :

1. Install the pipe work and fitting as per drawing.
2. Water test the pipe works to make sure that the work is properly done.
3. Make good and reinstate the works area affected by the works.
4. Remove the bamboo scaffold and clean the site.
5. Any removed pipe works shall be sprayed with diluted bleaching agent (bleaching agent: water = 1:99) and pack into plastic bag for construction waste disposal.

MINOR WORKS ITEM 3.24	REMOVAL OF ABOVEGROUND DRAIN THE ERECTION OF WHICH WAS UNAUTHORIZED

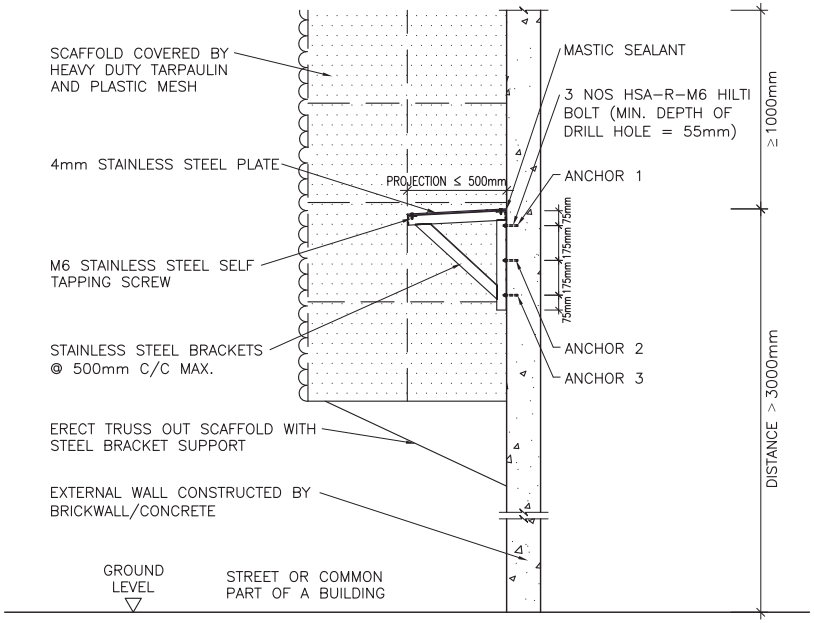

ANCHOR DESIGN FORCES (UNFACTORED) (NOTATIONS AS SHOWN IN DIAGRAM BELOW)

Load Case 1 (wind is upwards)

Anchor 1 : Fx = −0.98kN, Fy = 0.8kN, Fz = 0
Anchor 3 : Fx = −0.06kN, Fy = 0.8kN, Fz = 0

Load Case 2 (wind is downwards)

Anchor 1 : Fx = −0.73kN, Fy = −0.5kN, Fz = 0
Anchor 3 : Fx = −0.05kN, Fy = −0.5kN, Fz = 0

Anchor 2 is provided as safety redundancy

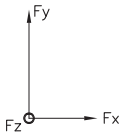

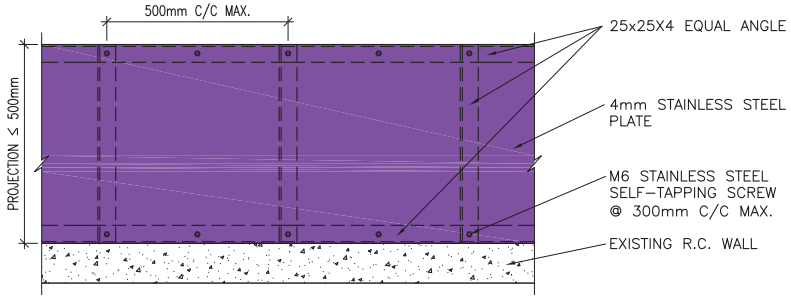

PLAN VIEW

GENERAL NOTES :

1. The works carried out shall comply with the Buildings Ordinance and the provisions of other enactment. (Reference can be made to the examples listed in Sections 3 and 10 of the Guidelines.)
2. All works shall comply with the following CoP/ standards:
   - Building (Construction) Regulations
   - Code of Practice on Wind Effects in Hong Kong 2004
   - Code of Practice for the Structural Use of Steel 2005
   - Code of Practice for the Structural Use of Concrete 2004
3. All stainless steel to be grade 304L to BS 1449.
4. All stainless steel bolts and screws to be grade A2-50 to BS 6105 with permissible yield stress of y_s = 210 N/mm²
5. All connections to be 3mm fillet weld all round with weld strength, p_w = 180 N/mm² to BS EN 1011-3 and electrode to BS EN 499.
6. All anchor bolts to be Hilti HSA-R M6 and shall be installed according to the manufacturer's specification.
7. Existing concrete grade and thickness of the wall are assumed to be grade 20 and 100 mm respectively.

DESIGN LOADS :

1. Dead Load = 0.31 kN/m²
2. Live Load = 0.75 kN/m²
3. Wind Load = 2.86 kN/m² with total pressure coefficient of 2.2(upwards) and 1.0(downwards) (100m above site ground level)

PREPARATION WORKS :

1. Obtain the existing design drawings/ information for reference prior to the commencement of works.
2. Inform the utilities company or sector if the works to be involved.
3. Carry out condition survey of the parent structure/ existing condition prior to the commencement of works.
4. The structural adequacy of the parent structure due to the additional installation of minor works must be checked to the satisfaction of structural requirement prior to carrying out of minor works.
5. Existing rendering or plastering to be removed before installation of steel frame.

SAFETY AND PRECAUTIONARY MEASURES :

1. Fence-off the working area from the public. Diversion arrangement shall be taken if necessary.
2. Bamboo scaffolds details shall refer to the following figures as shown on drawing no. GN-1.
   - Figure 2 Truss-out bamboo scaffold
   - Figure 4 Working platform on a double-row bamboo scaffold
3. Reference shall be made to "Guideline for the Removal of Typical Unauthorized Building Works and General Maintenance of External Walls" published by the Buildings Department.
4. Asbestos investigation works/ removal works shall be carried out by specialist contractor prior to any removal works.

WORKING PROCEDURES :

A. Erection
   1. Install the canopy as per the drawing.
   2. Make good and reinstate affected areas of the parent building.
   3. Dismantle the bamboo scaffold and clean the site.

B. Alteration
   1. Remove the defective member and replace with new one having the same size as the existing member.
   2. Make good and reinstate affected areas of the parent building.
   3. Dismantle the bamboo scaffold and clean the site.

C. Removal
   1. Remove the canopy by using mechanical hand held tools to cut the members into a manageable size and collect into the main building access for construction waste disposal.
   2. Make good and reinstate the affected areas of the parent building.
   3. Dismantle the bamboo scaffold and clean the site.

MINOR WORKS ITEM 3.25	ERECTION, ALTERATION OR REMOVAL OF CANOPY PROJECTING FROM THE EXTERNAL WALL OF A BUILDING

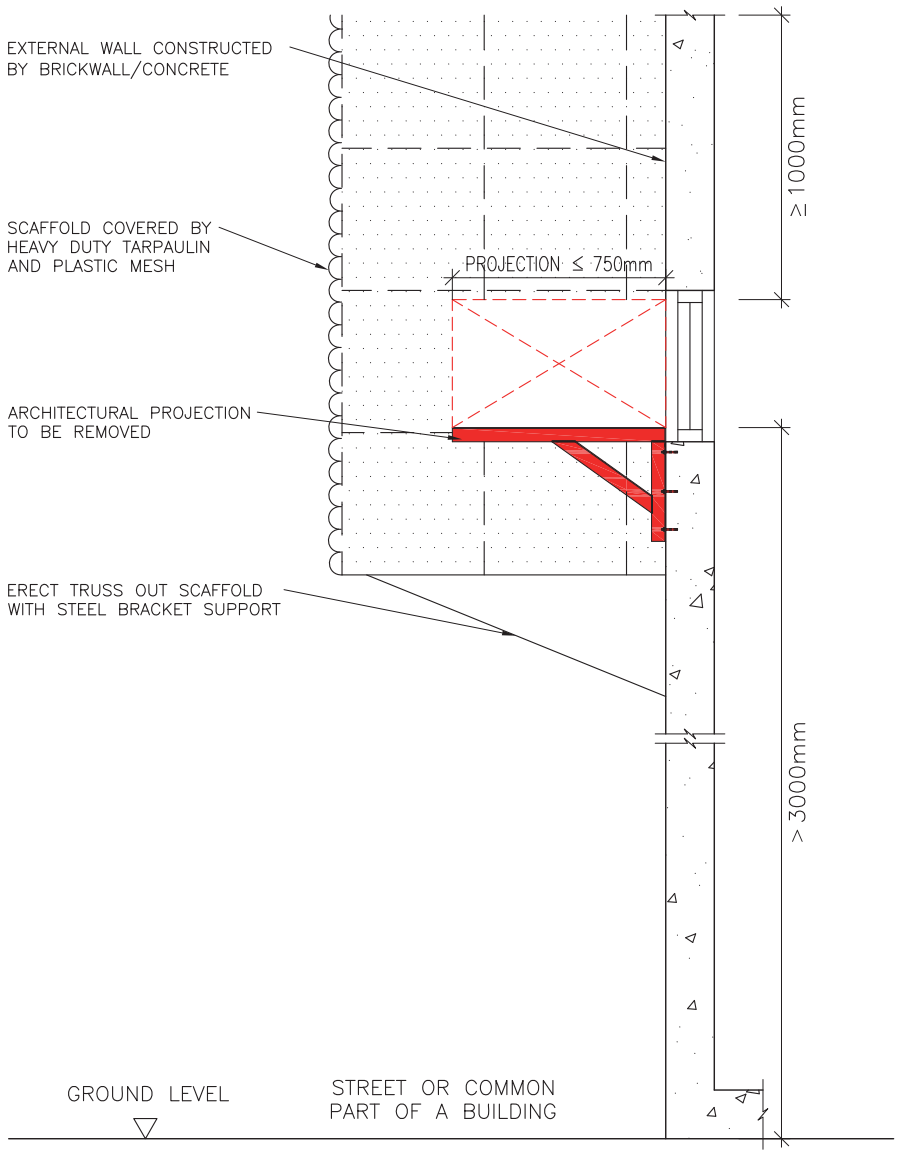

GENERAL NOTES :

The works carried out shall comply with the Buildings Ordinance and the provisions of other enactment. (Reference can be made to the examples listed in Sections 3 and 10 of the Guidelines.)

PREPARATION WORKS :

1. Obtain the existing design drawings/ information for reference prior to the commencement of works.
2. Inform the utilities company or sector if the works to be involved.
3. Carry out condition survey of the parent structure/ existing condition prior to the commencement of works.

SAFETY AND PRECAUTIONARY MEASURES :

1. Fence–off the working area from the public. Diversion arrangement shall be taken if necessary.
2. Bamboo scaffolds details shall refer to the following figures as shown on drawing no. GN–1.
   - Figure 2 Truss–out bamboo scaffold
   - Figure 4 Working platform on a double–row bamboo scaffold
3. Reference shall be made to the "Guideline for the Removal of Typical Unauthorized Building Works and General Maintenance of External Walls" published by the Buildings Department.

WORKING PROCEDURES :

1. Remove the air conditioning unit and any associated air ducts or rack including all the associated cables, duct works and etc.
2. Remove the architectural projection, canopy, supporting frame. Using mechanical hand held tools to cut the member into a manageable size for removal.
3. Make good and reinstate the affected areas of the parent building.
4. Dismantle the bamboo scaffold and clean the site.

Remarks: This case excludes items 13 or 14 of the Designated Exempted Works.

MINOR WORKS ITEM 3.26	**REMOVAL OF ARCHITECTURAL PROJECTION, CANOPY, SUPPORTING FRAME FOR AN AIR-CONDITIONING UNIT OR ASSOCIATED AIR DUCTS, OR RACK (OTHER THAN A DRYING RACK), PROJECTING FROM AN EXTERNAL WALL OF A BUILDING**

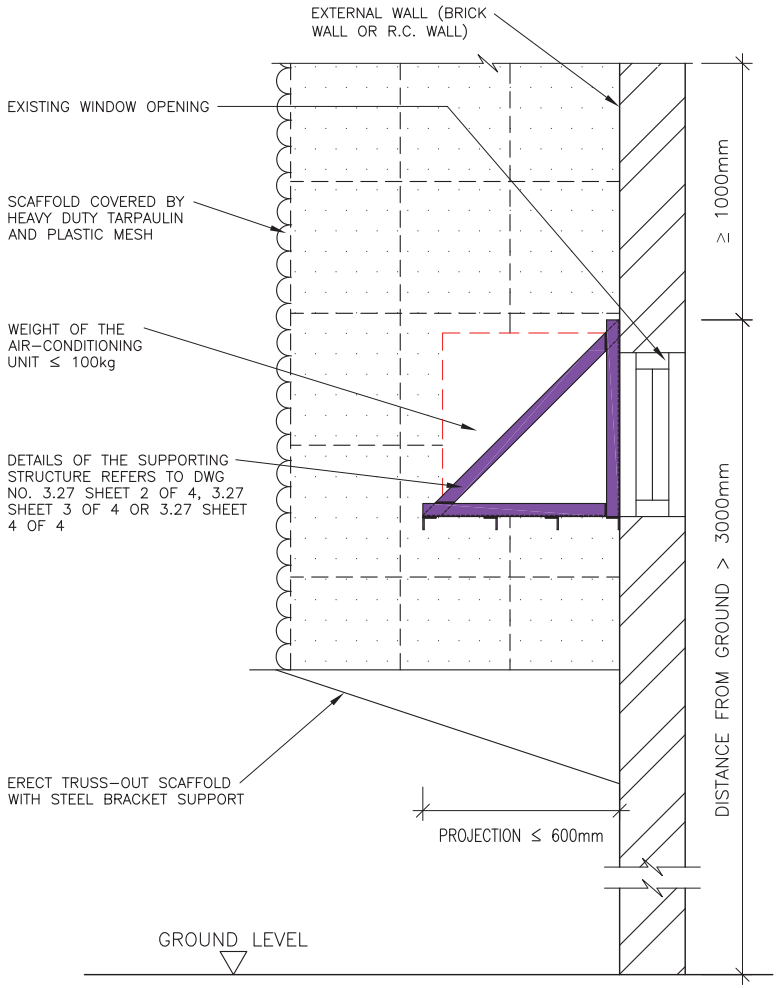

ERECTION OF METAL SUPPORTING FRAME FOR AN AIR–CONDITIONING UNIT OR ASSOCIATED AIR DUCTS PROJECTING FROM THE EXTERNAL WALL OF A BUILDING

(3 CASES ARE CONSIDERED INCLUDING :
1. SUPPORTING FRAME FOR R.C. WALL
2. SUPPORTING FRAME FOR BRICK WALL
3. SUPPORTING FRAME FOR WINDOW WALL)

GENERAL NOTES :

1. The works carried out shall comply with the Buildings Ordinance and the provisions of other enactment. (Reference can be made to the examples listed in Sections 3 and 10 of the Guidelines.)
2. All works shall comply with the following CoP/ standards:
   - Building (Construction) Regulations
   - Code of Practice on Wind Effects in Hong Kong 2004
   - Code of Practice for the Structural Use of Steel 2005
   - Code of Practice for the Structural Use of Concrete 2004
3. All stainless steel to be Grade 304L to BS 1449.
4. All connections to be 3 mm fillet weld all round with weld strength, p_w = 180 N/mm² to BS EN 1011–3 and electrode to BS EN 499.
5. a) For R.C. Wall – All anchor bolts to be Hilti HSA–R M10 and shall be installed according to the manufacturer's specification.
   b) For Brick Wall – All through bolts to be S.S. grade A4–50 to BS 6105.
   c) For Window – All bolt connections to be M6 S.S screws or bolts.
6. Existing concrete grade is assumed to be Grade 20 with a min. cube strength of 20 N/mm².
7. All existing aluminium to be Alloy H9–TE to CP 118.

DESIGN LOADS :

1. Dead Load = 2kN/m²
2. Live Load = 1.5kN/m²
3. Wind Load = 2.86kN/m² (100m above site ground level)

PREPARATION WORKS :

1. Obtain existing design drawings/ information for reference prior to commencement of works.
2. Carry out condition survey of the parent structure/ existing condition prior to the commencement of works.
3. For all cases, structural adequacy of the parent structure due to the additional installation of minor works must be checked to the satisfaction of structural requirement prior to the carrying out of minor works.
4. Plastering or rendering should be removed to expose concrete/ brickwork surface before installation of anchor bolts and steel angles.

SAFETY AND PRECAUTIONARY MEASURES :

1. Fence–off the working area from the public. Diversion arrangement shall be taken if necessary.
2. Bamboo scaffolds details shall refer to the following figure as shown on drawing no. GN–1.
   - Figure 2 Truss–out bamboo scaffold
   - Figure 4 Working Platform on a double–row bamboo scaffold

WORKING PROCEDURES :

a) Erection
   1. Install the supporting frame as per the drawing.
   2. Connect the flexible condensation pipe from the air–conditioning unit to the existing drain pipe of the building for drainage of the condensation.
   3. Make good and reinstate the affected areas of the parent building.
   4. Dismantle the scaffold and clean the site.

b) Alteration
   1. Remove the air–conditioning unit sitting on the supporting frame.
   2. Remove the defective member and replace with member of the same size.
   3. Re–connect the flexible condensation pipe from the air–conitioning unit to the existing drain pipe of the building for drainage of the condensation.
   4. Make good and reinstate the affected areas of the parent building.
   5. Dismantle the scaffold and clean the site.

c) Removal
   1. Remove the air–conditioning unit sitting on the supporting frame.
   2. Remove the supporting frame by cutting the member into smaller size for construction waste disposal.
   3. Make good and reinstate the affected areas.
   4. Dismantle the bamboo scaffold and clean the site.

Remarks : In case the building is not provided with a disposal system for drainage of the condensation, the building management/ IO/ other owners(where appropriate) should be informed for the provision of a proper disposal system.

MINOR WORKS ITEM 3.27	ERECTION, ALTERATION OR REMOVAL OF METAL SUPPORTING FRAME FOR AN AIR-CONDITIONING UNIT OR ASSOCIATED AIR DUCTS PROJECTING FROM THE EXTERNAL WALL OF A BUILDING	SHEET 1 OF 4

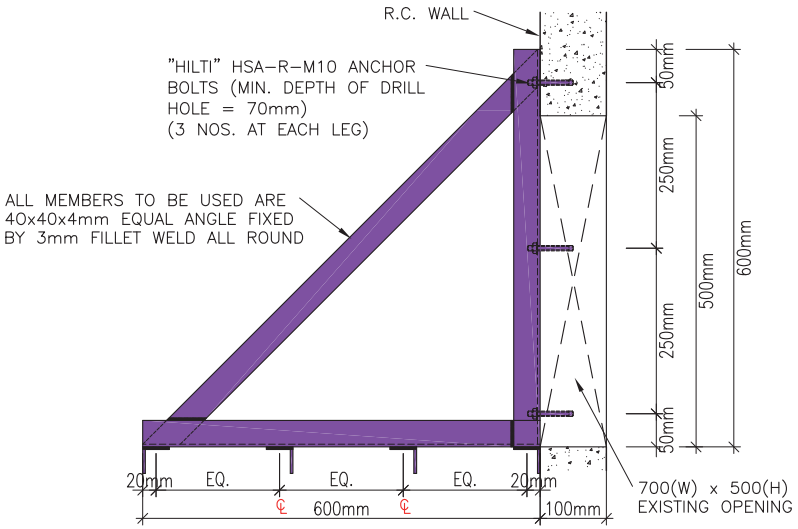

SUPPORTING FRAME FOR R.C. WALL (CASE 1)

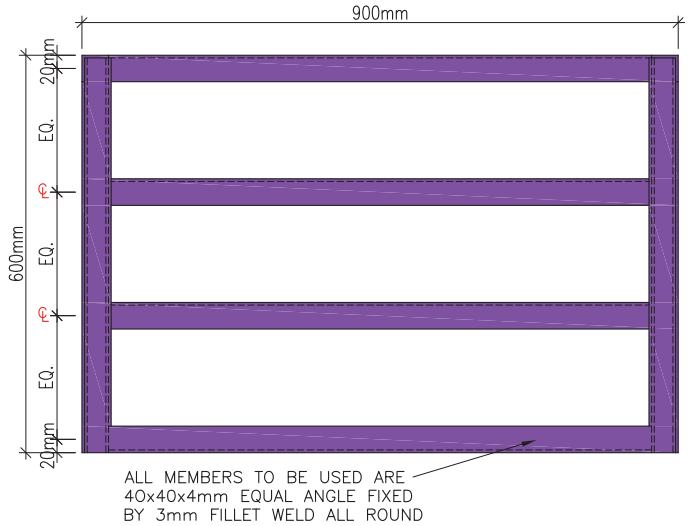

SUPPORTING FRAME LAYOUT PLAN

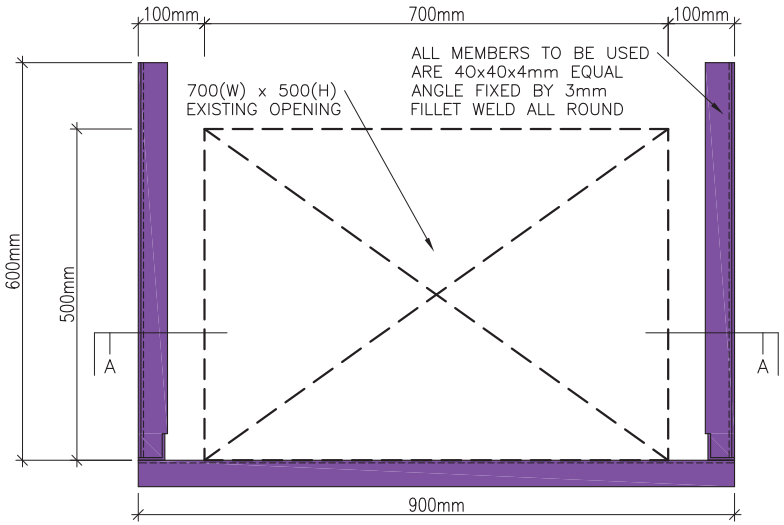

SUPPORTING FRAME FRONT ELEVATION

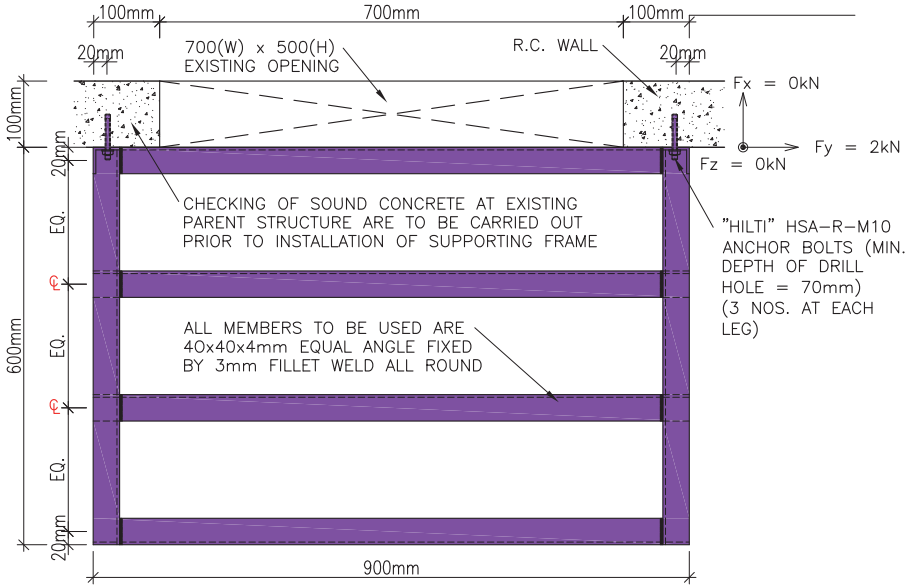

SECTION A–A

MINOR WORKS ITEM 3.27	ERECTION, ALTERATION OR REMOVAL OF METAL SUPPORTING FRAME FOR AN AIR-CONDITIONING UNIT OR ASSOCIATED AIR DUCTS PROJECTING FROM THE EXTERNAL WALL OF A BUILDING	SHEET 2 OF 4

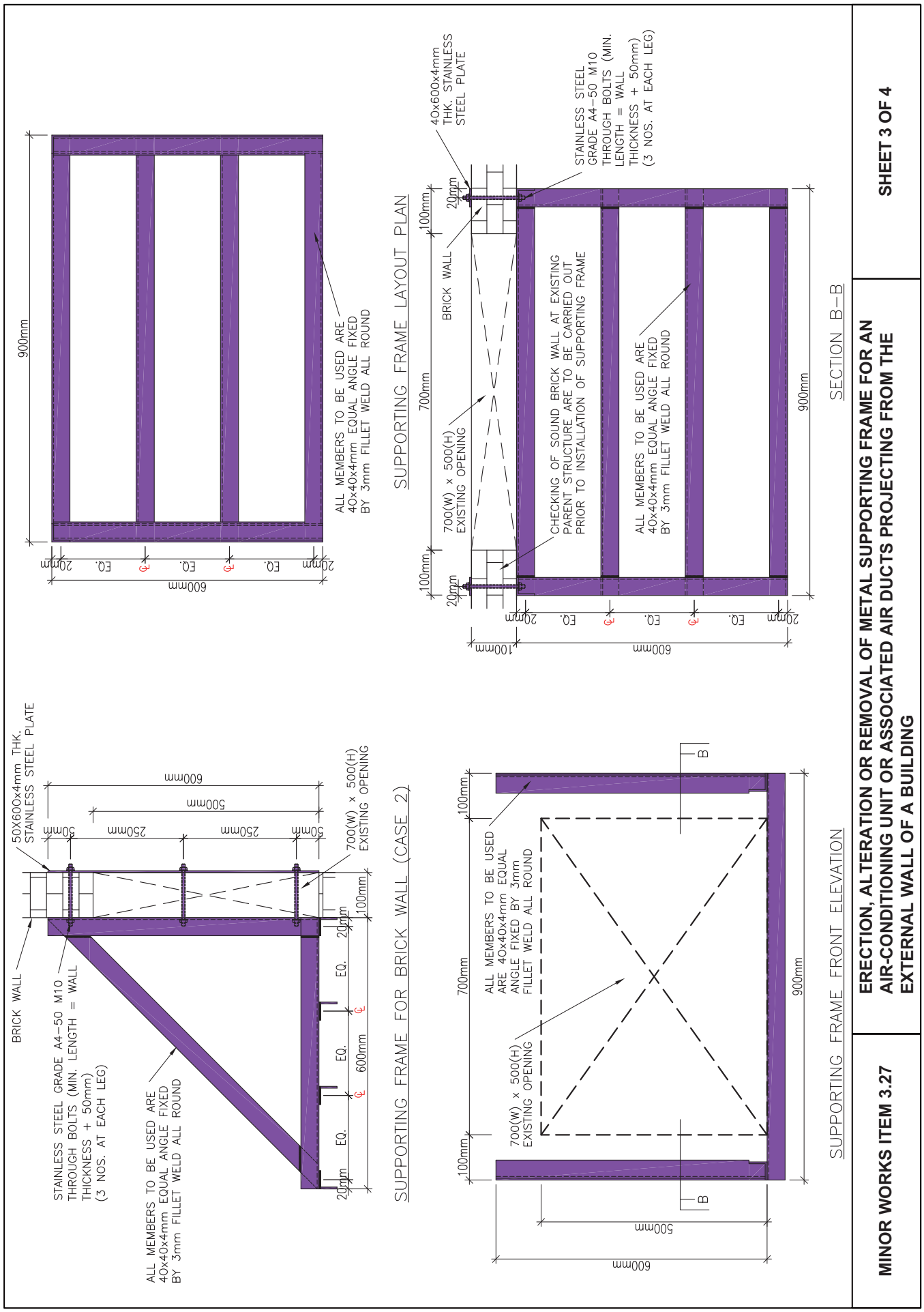
900mm
600mm
20mm
EQ.
ALL MEMBERS TO BE USED ARE 40x40x4mm EQUAL ANGLE FIXED BY 3mm FILLET WELD ALL ROUND
SUPPORTING FRAME LAYOUT PLAN
40x600x4mm THK. STAINLESS STEEL PLATE
STAINLESS STEEL GRADE A4–50 M10 THROUGH BOLTS (MIN. LENGTH = WALL THICKNESS + 50mm) (3 NOS. AT EACH LEG)
BRICK WALL
100mm
700mm
700(W) x 500(H) EXISTING OPENING
CHECKING OF SOUND BRICK WALL AT EXISTING PARENT STRUCTURE ARE TO BE CARRIED OUT PRIOR TO INSTALLATION OF SUPPORTING FRAME
SECTION B–B
50X600x4mm THK. STAINLESS STEEL PLATE
500mm
250mm
50mm
SUPPORTING FRAME FOR BRICK WALL (CASE 2)
ALL MEMBERS TO BE USED ARE 40x40x4mm EQUAL ANGLE FIXED BY 3mm FILLET WELD ALL ROUND
SUPPORTING FRAME FRONT ELEVATION
B
SHEET 3 OF 4
ERECTION, ALTERATION OR REMOVAL OF METAL SUPPORTING FRAME FOR AN AIR-CONDITIONING UNIT OR ASSOCIATED AIR DUCTS PROJECTING FROM THE EXTERNAL WALL OF A BUILDING
MINOR WORKS ITEM 3.27

2010/10

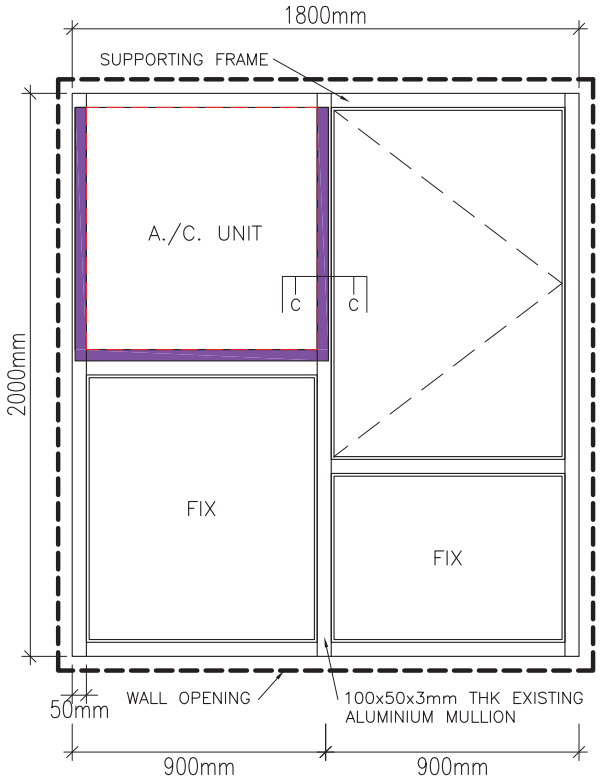

WINDOW FRONT ELEVATION

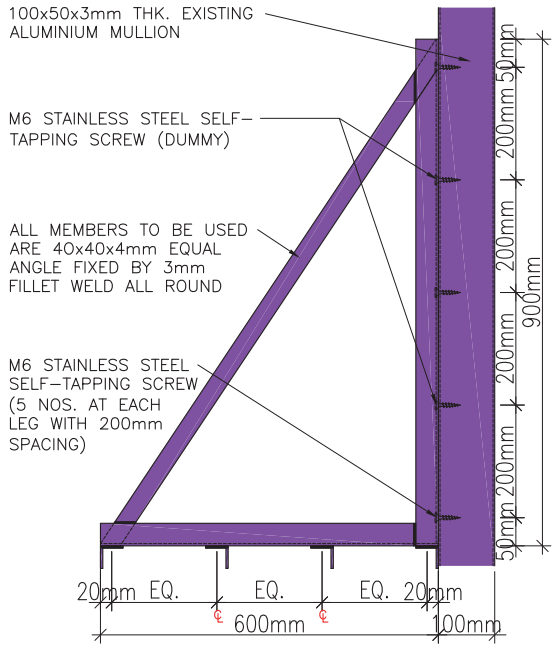

SUPPORTING FRAME FOR WINDOW (CASE 3)

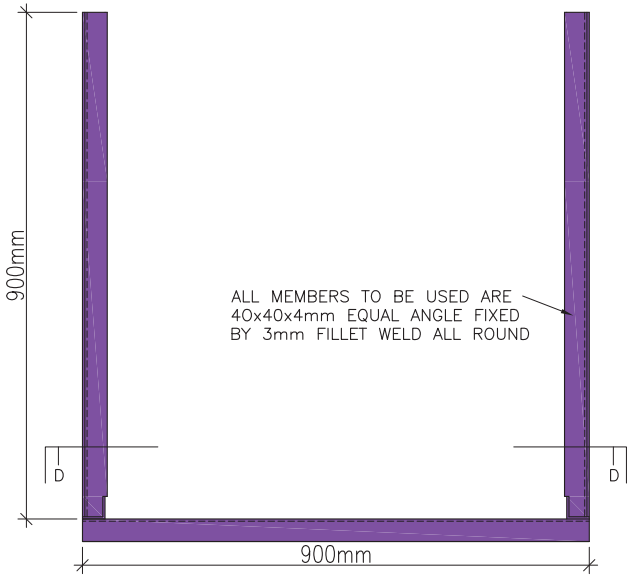

SUPPORTING FRAME FRONT ELEVATION

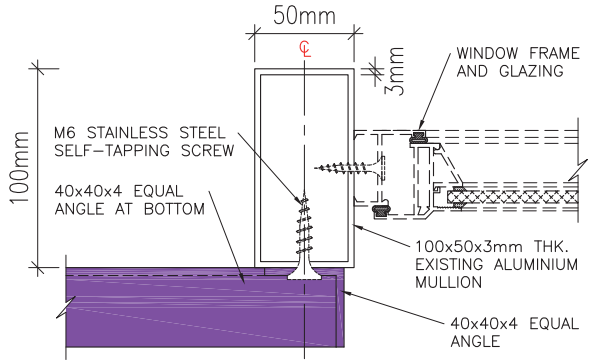

SECTION C–C

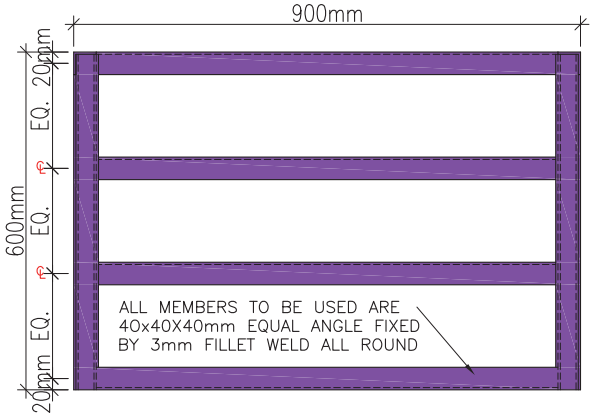

SUPPORTING FRAME LAYOUT PLAN

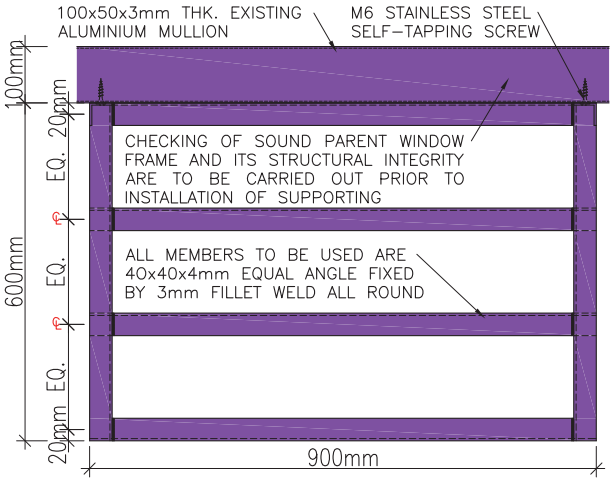

SECTION D–D

MINOR WORKS ITEM 3.27	ERECTION, ALTERATION OR REMOVAL OF METAL SUPPORTING FRAME FOR AN AIR-CONDITIONING UNIT OR ASSOCIATED AIR DUCTS PROJECTING FROM THE EXTERNAL WALL OF A BUILDING	SHEET 4 OF 4

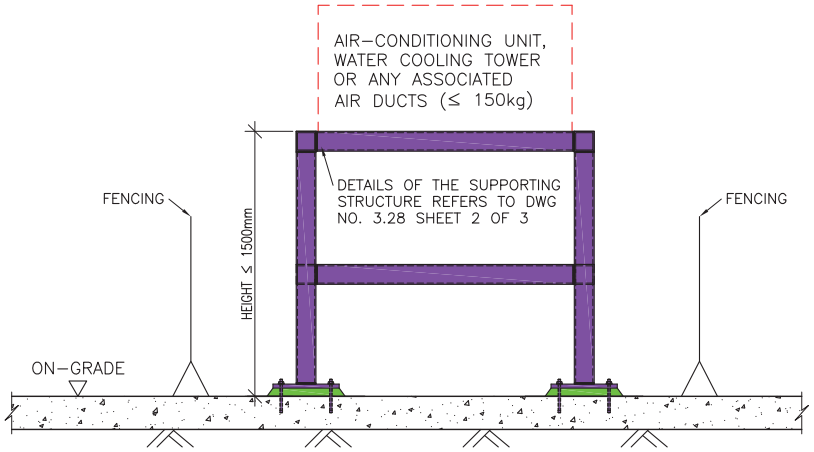

CASE 1: ON–GRADE

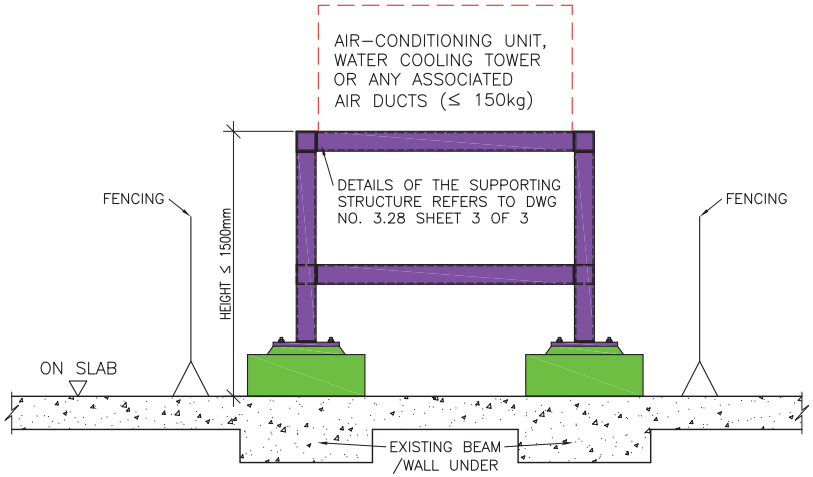

CASE 2: ON SLAB SUPPORTED ON PLINTH

ERECTION OF SUPPORTING STRUCTURE FOR AIR CONDITIONING UNIT, WATER COOLING TOWER OR ASSOCIATED AIR DUCTS

GENERAL NOTES :

1. The works carried out shall comply with the Buildings Ordinance and the provisions of other enactment. (Reference can be made to the examples listed in Sections 3 and 10 of the Guidelines.)
2. All works shall comply with the following CoP/ standards:
   - Building (Construction) Regulations 1997
   - Code of Practice on Wind Effects in Hong Kong 2004
   - Code of Practice for the Structural Use of Steel 2005
   - Code of Practice for the Structural Use of Concrete 2004
   - Code of Practice for Foundations
3. All structural steel to be grade S275 class 1 to BS EN 10210 and shall be hot dip galvanized to BS EN ISO 1461.
4. All steel members shall be protected with one coat of "Sika Unitherm 38019 Exterior" fire resistance paint or equivalent to the manufacturer's specification.
5. All connections to be butt weld with weld strength, p_w = 220 N/mm² to BS EN 1011 and all electrodes to BS EN ISO 2560.
6. All anchor bolts to be Hilti HSA–R M10 and shall be installed according to the manufacturer's specification.
7. All concrete works shall comply with CS1.
8. Existing concrete grade are assumed to be Grade 30 with 75 mm concrete cover.
9. Steel reinforcement shall comply with CS2:1995 and to be high yield type II deformed bar with the characteristic strength of 460 N/mm².
10. Minimum anchorage and lap length to be 600mm unless otherwise specified.
11. Minimum allowable ground pressure to be 50 kN/m².
12. This design is valid subject to structural adequacy of existing parent structure otherwise schemes involving stiffening/ spreader beams etc. may be necessary.

DESIGN LOADS :

1. Dead Load = 1.5kN
2. Live Load = 2kN
3. Wind Load = 1.82kN/m² with force coeff. 2.0 (< 5m above site ground level) for max. projected area of 0.48m².
4. Design Live Load for Existing Slab = 2.5kPa

PREPARATION WORKS :

1. Obtain the original design drawings/ information for reference prior to the commencement of works.
2. Carry out condition survey of the parent structure/ existing condition prior to the commencement of works.
3. Obtain the original deign of the approved structure for reference of any required reinstatement works.
4. The structural adequacy of the supporting parent structure due to additional installation of minor works must be checked to the satisfaction of structural requirement prior to the carrying out of minor works.

SAFETY AND PRECAUTIONARY MEASURES :

1. Fence–off the working area from the public. Diversion arrangement shall be taken if necessary.

WORKING PROCEDURES :

A. Erection
   1. Install the supporting structure as per the drawing.
   2. Make good and reinstate the affected area (including waterproofing layer) and clean the site.

B. Alteration
   1. Disconnect all water pipes and electrical cable or wires and temporary remove existing air–conditioning unit, water cooling tower or any associated air ducts if necessary.
   2. Remove the defective member and replace with new one having the same size as the existing member.
   3. Make good and reinstate the affected area (including waterproofing layer) and clean the site.

C. Removal
   1. Disconnect all water pipes and electrical cable or wires and remove the existing air–conditioning unit, water cooling tower or any associated air ducts if necessary.
   2. Cut the supporting structure into manageable size by hand–held tools or machine and retrieve for construction waste disposal.
   3. Make good and reinstate the affected area (including waterproofing layer) and clean the site.

Remarks:

1. These cases exclude item 12 of the Designated Exempted Works.
2. The works include the connection of flexible condensation pipe from the air–conditioning unit to an existing drain pipe. In case the building is not provided with a disposal system for drainage of the condensation, the building management/ IO/ other owners (where appropriate) should be informed for the provision of a proper disposal system.

MINOR WORKS ITEM 3.28	ERECTION, ALTERATION OR REMOVAL OF SUPPORTING STRUCTURE FOR AIR-CONDITIONING UNIT, WATER COOLING TOWER OR ASSOCIATED AIR DUCTS ON-GRADE OR ON A SLAB	SHEET 1 OF 3

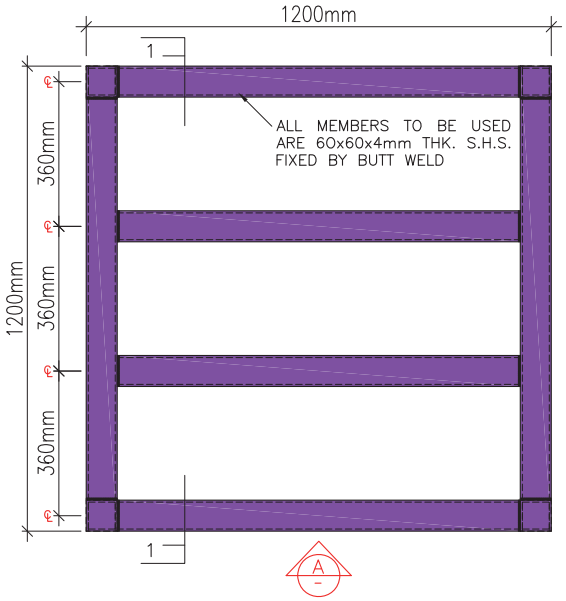

SUPPORTING FRAME LAYOUT PLAN
(CASE 1: ON–GRADE)

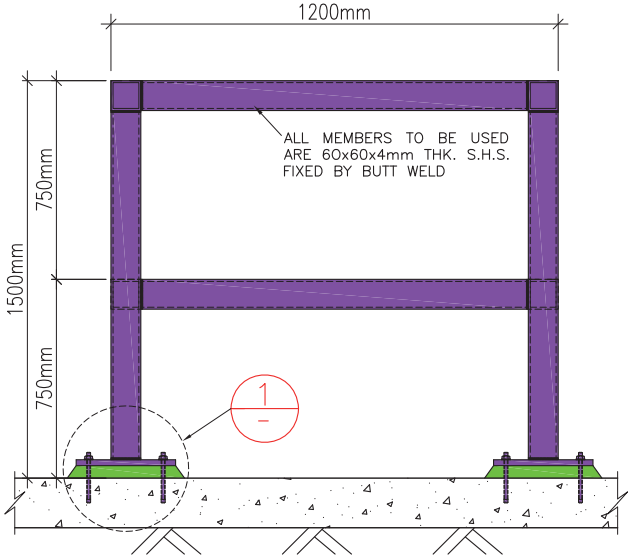

VIEW A

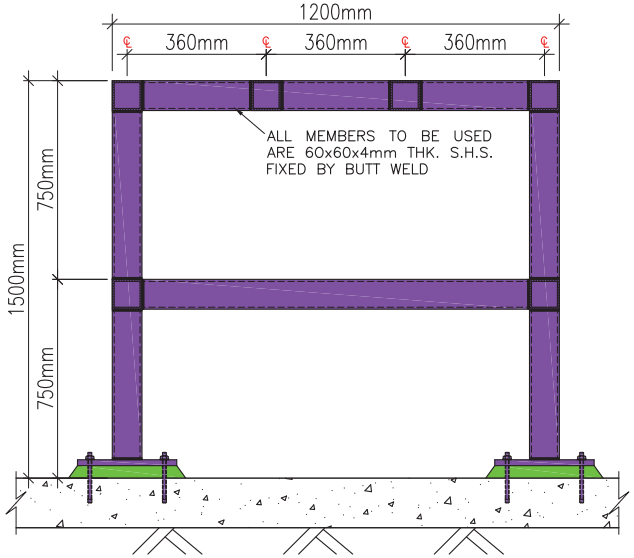

SECTION 1 – 1

DESIGN FORCES (UNFACTORED LOAD):

F_x = +/– 1kN (HORIZONTAL DIR.)
F_y = 4kN COMPRESSION OR
3kN TENSION (IN VERTICAL DIR.)
F_z = +/– 1kN (HORIZONTAL DIR.)

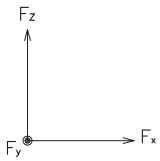

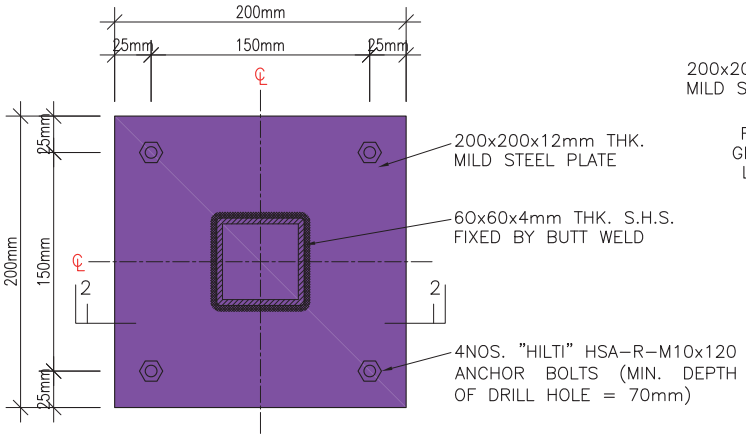

DETAIL 1

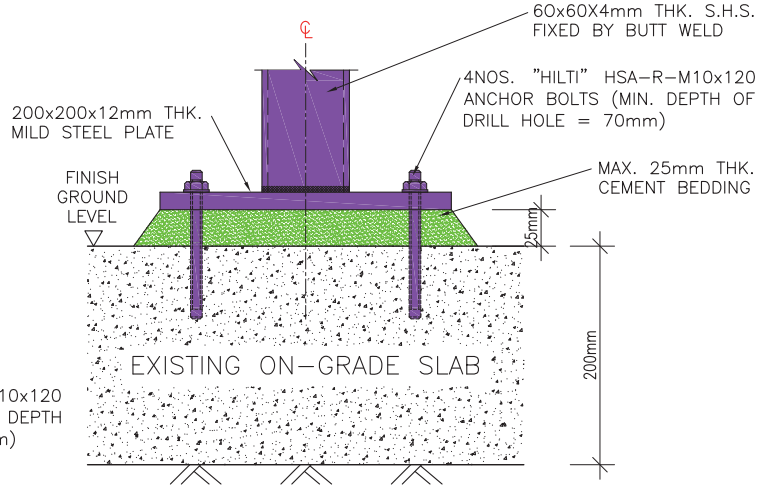

SECTION 2 – 2

MINOR WORKS ITEM 3.28	**ERECTION, ALTERATION OR REMOVAL OF SUPPORTING STRUCTURE FOR AIR-CONDITIONING UNIT, WATER COOLING TOWER OR ASSOCIATED AIR DUCTS ON-GRADE OR ON A SLAB**	**SHEET 2 OF 3**

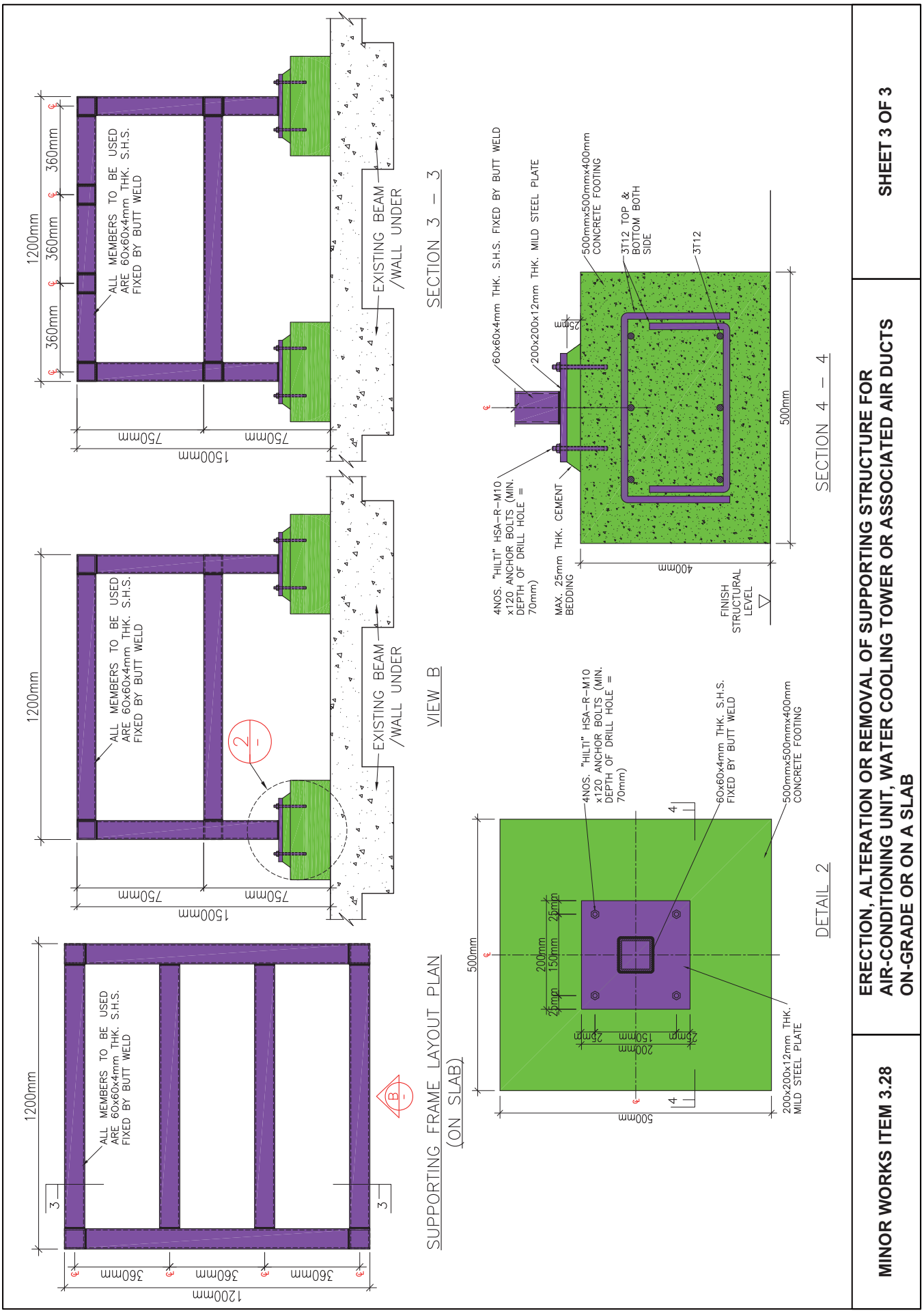
1200mm
360mm
360mm
360mm
ALL MEMBERS TO BE USED ARE 60x60x4mm THK. S.H.S. FIXED BY BUTT WELD
750mm
750mm
1500mm
EXISTING BEAM /WALL UNDER
SECTION 3 – 3
1200mm
ALL MEMBERS TO BE USED ARE 60x60x4mm THK. S.H.S. FIXED BY BUTT WELD
2
750mm
750mm
1500mm
EXISTING BEAM /WALL UNDER
VIEW B
1200mm
ALL MEMBERS TO BE USED ARE 60x60x4mm THK. S.H.S. FIXED BY BUTT WELD
3
3
B
360mm
360mm
360mm
1200mm
SUPPORTING FRAME LAYOUT PLAN (ON SLAB)
60x60x4mm THK. S.H.S. FIXED BY BUTT WELD
200x200x12mm THK. MILD STEEL PLATE
500mmx500mmx400mm CONCRETE FOOTING
3T12 TOP & BOTTOM BOTH SIDE
3T12
25mm
4NOS. "HILTI" HSA–R–M10 x120 ANCHOR BOLTS (MIN. DEPTH OF DRILL HOLE = 70mm)
MAX. 25mm THK. CEMENT BEDDING
400mm
500mm
FINISH STRUCTURAL LEVEL
SECTION 4 – 4
4NOS. "HILTI" HSA–R–M10 x120 ANCHOR BOLTS (MIN. DEPTH OF DRILL HOLE = 70mm)
60x60x4mm THK. S.H.S. FIXED BY BUTT WELD
500mmx500mmx400mm CONCRETE FOOTING
4
4
500mm
200mm
150mm
25mm
25mm
25mm
150mm
25mm
200mm
500mm
200x200x12mm THK. MILD STEEL PLATE
DETAIL 2
SHEET 3 OF 3
ERECTION, ALTERATION OR REMOVAL OF SUPPORTING STRUCTURE FOR AIR-CONDITIONING UNIT, WATER COOLING TOWER OR ASSOCIATED AIR DUCTS ON-GRADE OR ON A SLAB
MINOR WORKS ITEM 3.28

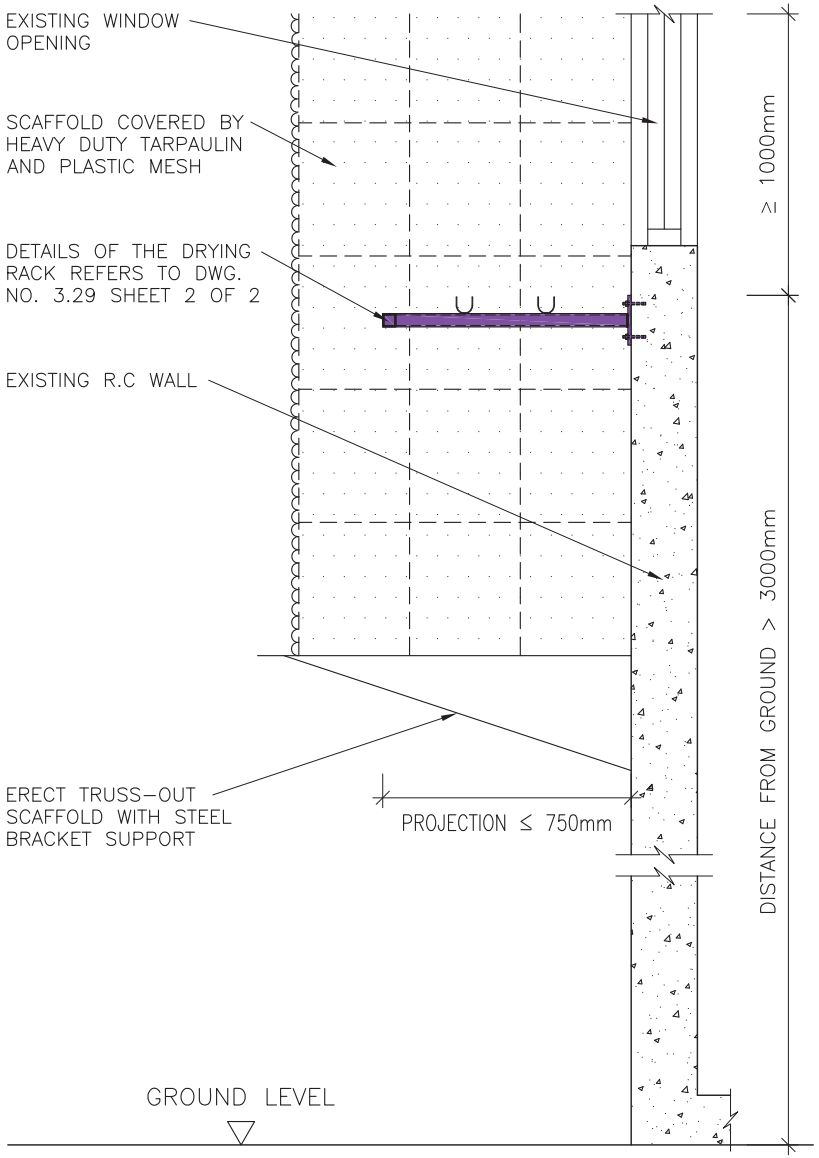

GENERAL NOTES :

1. The works carried out shall comply with the Buildings Ordinance and the provisions of other enactment. (Reference can be made to the examples listed in Sections 3 and 10 of the Guidelines.)
2. All works shall comply with the following CoP/ standards:
   - Building (Construction) Regulations
   - Code of Practice on Wind Effects in Hong Kong 2004
   - Code of Practice for the Structural Use of Steel 2005
   - Code of Practice for the Structural Use of Concrete 2004
3. All stainless steel to be grade 304L to BS 1449.
4. All connections to be 3 mm fillet weld all round with weld strength, p_w = 180 N/mm² to BS EN 1011-3 and electrode to BS EN 499.
5. For R.C. Wall – All anchor bolts to be Hilti HSA-R M10 and shall be installed according to the manufacturer's specification.
6. Existing concrete grade to be grade 20 with a min. cube strength of 20 N/mm².

DESIGN LOADS :

1. Dead Load = 0.25 kN/m²
2. Wind Load = 2.86 kN/m² (100m above site ground level) with force coeff. of 1.0 and solidity ratio of 0.5.

PREPARATION WORKS :

1. Obtain the existing design drawings/ information for reference prior to the commencement of works.
2. Carry out condition survey and condition of the external wall for which the drying rack is going to be installed prior to the commencement of works.
3. Obtain the original design of the approved structure for reference of any required reinstatement works.

SAFETY AND PRECAUTIONARY MEASURES :

1. Fence-off the working area from the public. Diversion arrangement shall be taken if necessary.
2. Bamboo scaffolds details shall refer to the following figure as shown on drawing no. GN-1.
   - Figure 2 Truss-out bamboo scaffold
   - Figure 4 Working platform on a double-row bamboo scaffold

WORKING PROCEDURES :

A. Erection

1. Install the drying rack as per the attached details.
2. Make good and reinstate the affected areas of the parent building.
3. Dismantle the scaffold and clean the site.

B. Alteration

1. Remove the defective part of the drying rack and replace with the same size of the existing member.
2. Make good and reinstate the affected areas of the parent building.
3. Dismantle the scaffold and clean the site.

C. Removal

1. Hold the drying rack by rope (the other end of rope shall be tie to a secure end, i.e. a column).
2. Remove the drying rack using mechanical hand held tools, cut the drying rack into small pieces for construction waste disposal.
3. Make good and reinstate the parent structure affected by the work.
4. Dismantle the bamboo scaffold and clean the site.

MINOR WORKS ITEM 3.29	ERECTION, ALTERATION OR REMOVAL OF DRYING RACK PROJECTING FROM THE EXTERNAL WALL OF A BUILDING	SHEET 1 OF 2

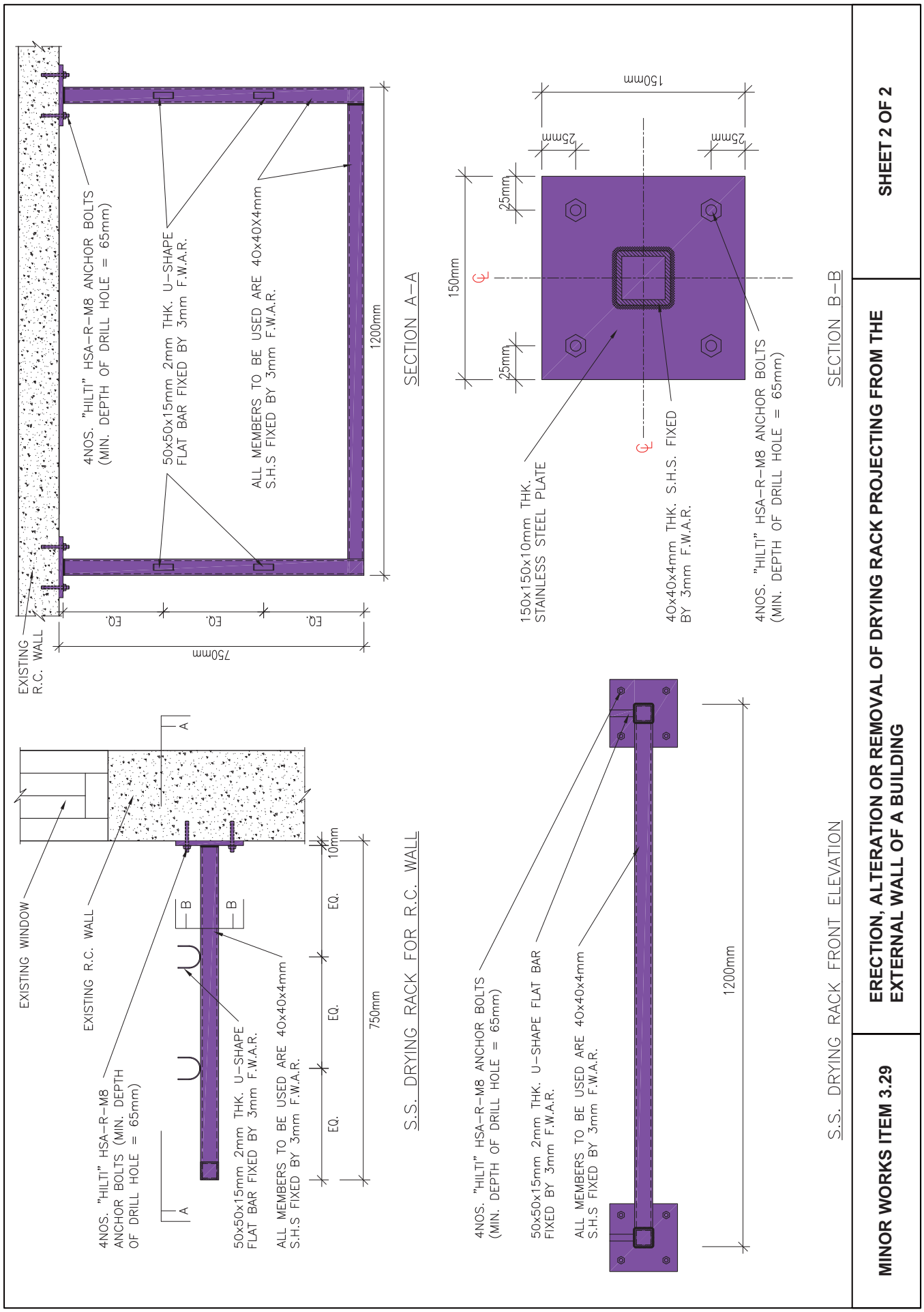
EXISTING R.C. WALL
4NOS. "HILTI" HSA-R-M8 ANCHOR BOLTS (MIN. DEPTH OF DRILL HOLE = 65mm)
50x50x15mm 2mm THK. U-SHAPE FLAT BAR FIXED BY 3mm F.W.A.R.
ALL MEMBERS TO BE USED ARE 40x40X4mm S.H.S FIXED BY 3mm F.W.A.R.
750mm
EQ.
EQ.
EQ.
1200mm
SECTION A-A
150mm
25mm
25mm
150mm
25mm
25mm
150x150x10mm THK. STAINLESS STEEL PLATE
40x40x4mm THK. S.H.S. FIXED BY 3mm F.W.A.R.
4NOS. "HILTI" HSA-R-M8 ANCHOR BOLTS (MIN. DEPTH OF DRILL HOLE = 65mm)
SECTION B-B
EXISTING WINDOW
EXISTING R.C. WALL
4NOS. "HILTI" HSA-R-M8 ANCHOR BOLTS (MIN. DEPTH OF DRILL HOLE = 65mm)
50x50x15mm 2mm THK. U-SHAPE FLAT BAR FIXED BY 3mm F.W.A.R.
ALL MEMBERS TO BE USED ARE 40x40x4mm S.H.S FIXED BY 3mm F.W.A.R.
A
A
B
B
EQ.
EQ.
EQ.
10mm
750mm
S.S. DRYING RACK FOR R.C. WALL
4NOS. "HILTI" HSA-R-M8 ANCHOR BOLTS (MIN. DEPTH OF DRILL HOLE = 65mm)
50x50x15mm 2mm THK. U-SHAPE FLAT BAR FIXED BY 3mm F.W.A.R.
ALL MEMBERS TO BE USED ARE 40x40x4mm S.H.S FIXED BY 3mm F.W.A.R.
1200mm
S.S. DRYING RACK FRONT ELEVATION
SHEET 2 OF 2
ERECTION, ALTERATION OR REMOVAL OF DRYING RACK PROJECTING FROM THE EXTERNAL WALL OF A BUILDING
MINOR WORKS ITEM 3.29

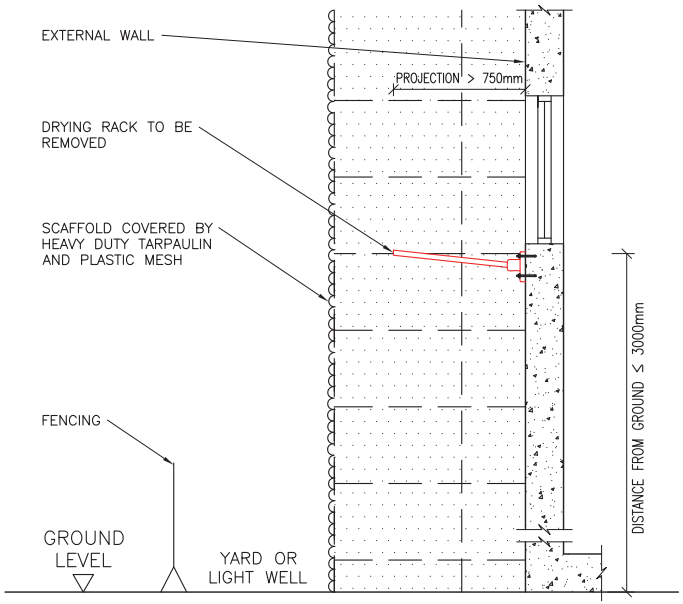

CASE 1

OR

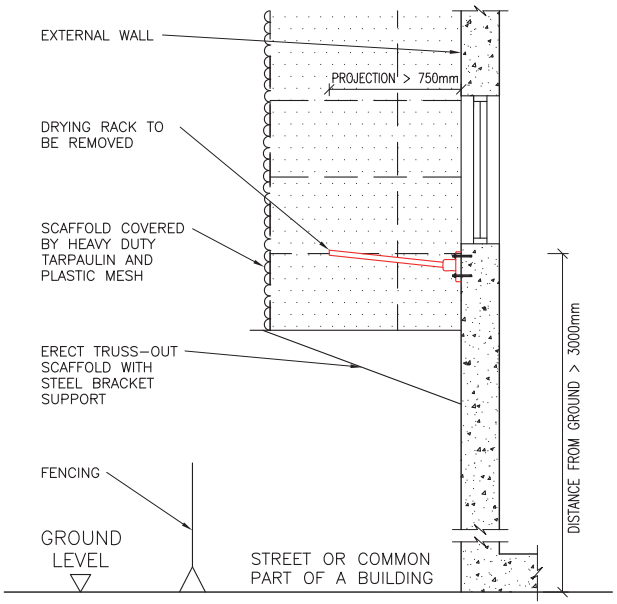

CASE 2

GENERAL NOTES :

The works carried out shall comply with the Buildings Ordinance and the provisions of other enactment. (Reference can be made to the examples listed in Sections 3 and 10 of the Guidelines.)

PREPARATION WORKS :

1. Obtain the existing design drawings/ information of the signboard for reference prior to the commencement of works.
2. Carry out condition survey of the parent structure/ existing condition prior to the commencement of works.

SAFETY AND PRECAUTIONARY MEASURES :

1. Fence-off the working area from the public. Diversion arrangement shall be taken if necessary
2. Bamboo scaffolds details shall refer to the following figures as shown on drawing no. GN-1:
   - Figure 2 Truss-out bamboo scaffold
   - Figure 4 Working platform on a double-row bamboo scaffold

WORKING PROCEDURES :

1. Hold the drying rack by rope (the other end of rope shall be tied to a secure end, i.e. a column).
2. Remove the drying rack using mechanically hand held tools. Cut down the drying rack into small pieces for construction waste disposal.
3. Make good and reinstate the parent structure affected by the work.
4. Dismantle the bamboo scaffold and clean the site.

Remarks: This case excludes item 15 of the Designated Exempted Works.

MINOR WORKS ITEM 3.30	REMOVAL OF DRYING RACK PROJECTING FROM THE EXTERNAL WALL OF A BUILDING

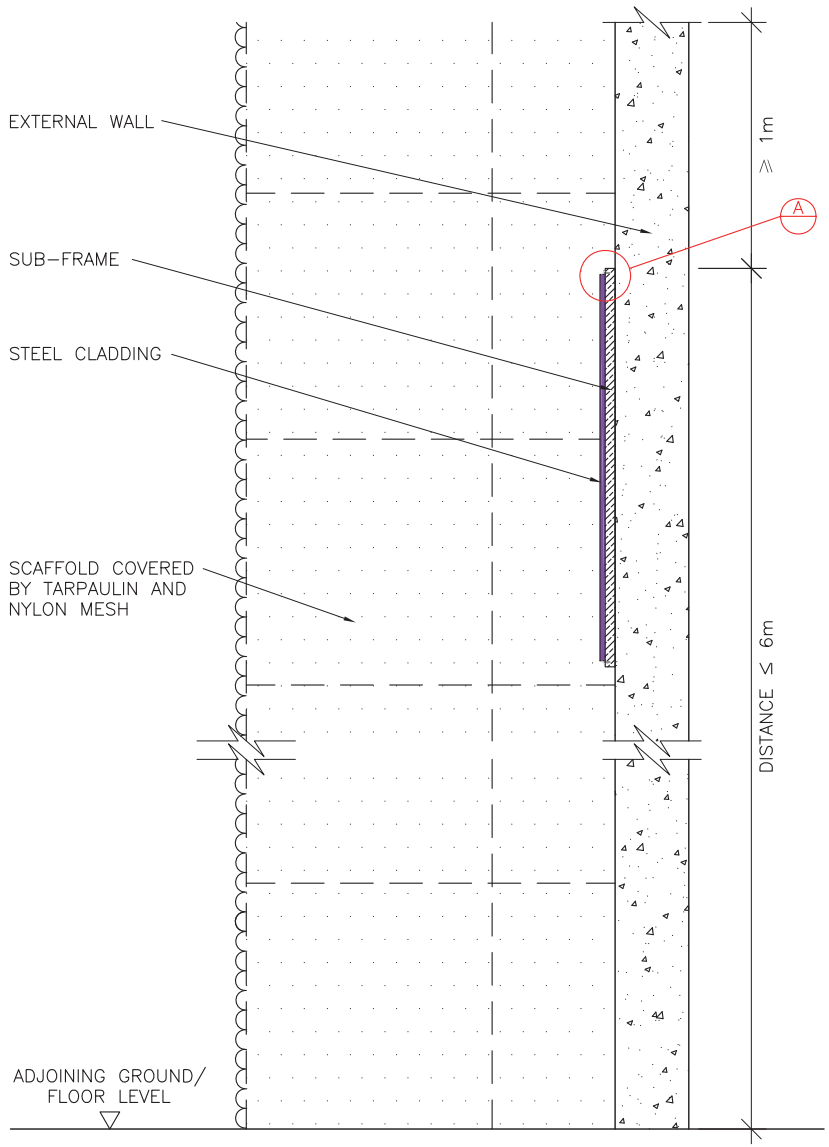

ERECTION OF CLADDING

GENERAL NOTES :

1. The works carried out shall comply with the Buildings Ordinance and the provisions of other enactment. (Reference can be made to the examples listed in Sections 3 and 10 of the Guidelines.)
2. All works shall comply with the following CoP/ standards:
   - Building (Construction) Regulations
   - Code of Practice on Wind Effects in Hong Kong 2004
   - Code of Practice for the Structural Use of Steel 2005
   - Code of Practice for the Structural Use of Concrete 2004
3. All structural steel to be stainless steel grade 316 to BS 1449.
4. All anchor bolts to be Hilti HSA–R–M8 (stainless steel) and shall be installed according to the manufacturer's specification.
5. All connections to be 3mm fillet weld all round or butt weld with weld strength of pw = 220 N/mm² to BS EN 1011 and all electrodes to BS EN ISO 2560.
6. All stainless steel screws to be grade A2–50 to BS 6105 with permissible yield stress of y_s = 210 N/mm².
7. All sealant to be "DOW CORNING" silicone sealant 795 (BD REF. BD–SS–001).
8. Existing concrete grade and minimum thickness of the parent wall are assumed to be Grade 20 and 100 mm respectively.

DESIGN LOADS:

1. Dead Load = 0.20 kN/m²
2. Wind Load = 2.01 kN/m² with total pressure coefficient C_p of 1.4

ANCHOR BOLT DESIGN FORCE:

1. Design Vertical Shear = 0.2 kN
2. Design Tension = 2.7 kN

PREPARATION WORKS :

1. Obtain the existing design drawings/information for reference prior to the commencement of works.
2. Carry out condition survey of the parent structure/ existing condition prior to the commencement of works.
3. Inform the utilities company or sector if the works to be involved.
4. Obtain the original design of the approved structure for reference of any required reinstatement works.
5. The structural adequacy of the parent structure due to the additional installation of minor works must be checked to the satisfaction of structural requirements prior to carrying out of minor works.
6. Existing rendering or plastering to be removed before installation of steel frame.

SAFETY AND PRECAUTIONARY MEASURES :

1. Fence–off the working area from the public. Diversion arrangement shall be taken if necessary.
2. Bamboo scaffolds details shall refer to the following figure as shown on drawing no. GN–1.
   - Figure 1 Double–row bamboo scaffold and working platform over pavement
   - Figure 4 Working platform on a double–row bamboo scaffold

WORKING PROCEDURES :

A) Erection
   1. Install the cladding as per the drawing.
   2. Make good and reinstate the affected areas of the parent building.
   3. Dismantle the bamboo scaffold and clean the site.

B) Repair
   1. Remove the defective cladding panel and use the same size of panel for replacement
   2. Make good and reinstate the affected areas of the parent building.
   3. Dismantle the bamboo scaffold and clean the site.

C) Removal
   1. Remove the cladding using hand–held mechanical tool.
   2. Cut the backing frame into small pieces for construction waste disposal.
   3. Make good and reinstate the affected areas of the parent building.
   4. Dismantle the bamboo scaffold and clean the site.

MINOR WORKS ITEM 3.31	ERECTION, REPAIR OR REMOVAL OF CLADDING FIXED TO THE EXTERNAL WALL OF A BUILDING	SHEET 1 OF 3

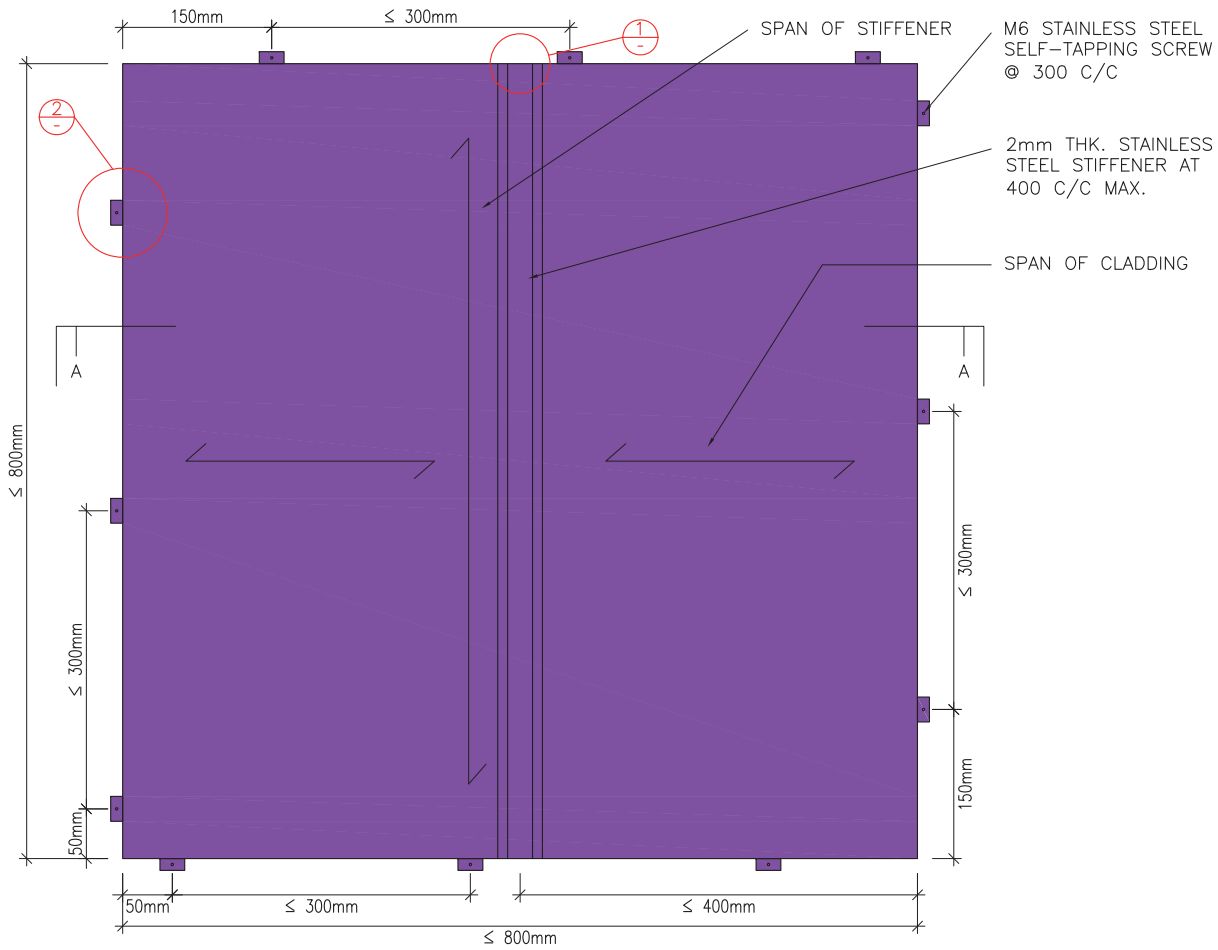

TYPICAL DETAIL FOR STAINLESS STEEL CLADDING

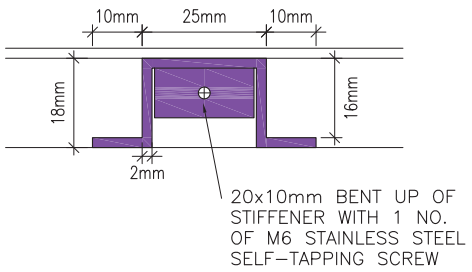

DETAIL 1 (END SUPPORT DETAILS OF STIFFENER AT CLADING EDGE)

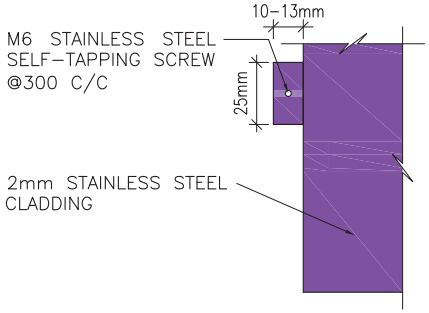

DETAIL 2

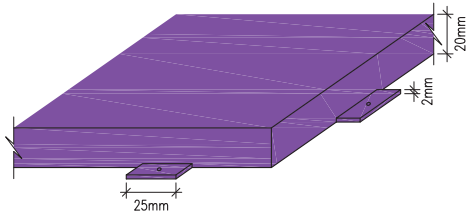

ISOMETRIC VIEW OF CLADDING EDGE BENT–UP FIXING DETAILS

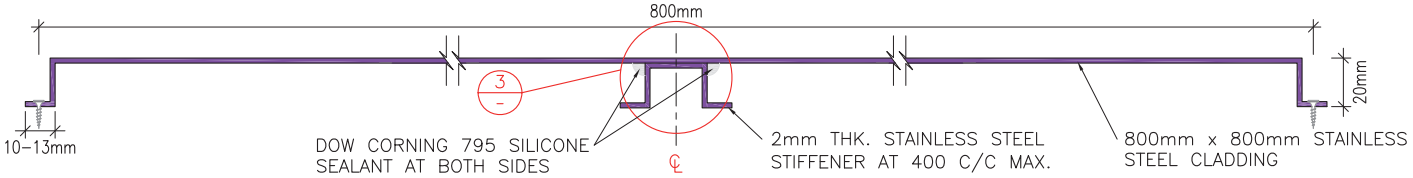

SECTION A–A

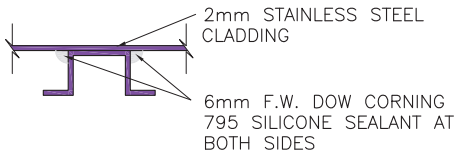

DETAIL 3

MINOR WORKS ITEM 3.31	ERECTION, REPAIR OR REMOVAL OF CLADDING FIXED TO THE EXTERNAL WALL OF A BUILDING	SHEET 2 OF 3

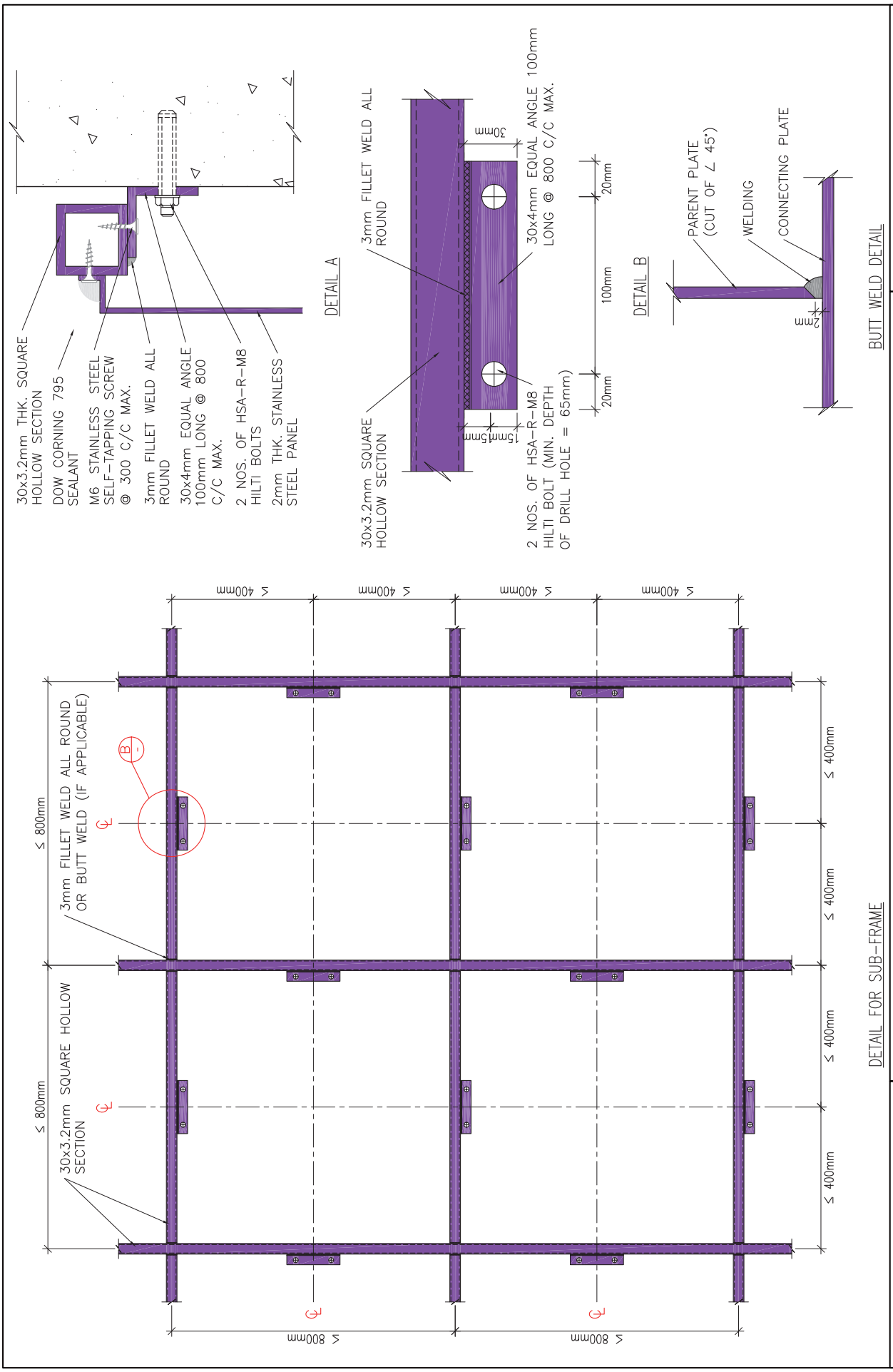

MINOR WORKS ITEM 3.31	ERECTION, REPAIR OR REMOVAL OF CLADDING FIXED TO THE EXTERNAL WALL OF A BUILDING
	SHEET 3 OF 3

2010/10

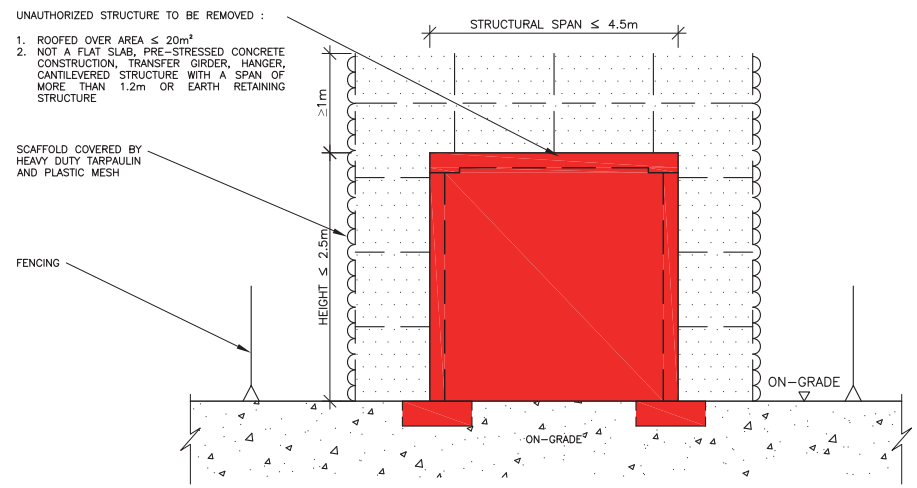

CASE 1: ON-GRADE

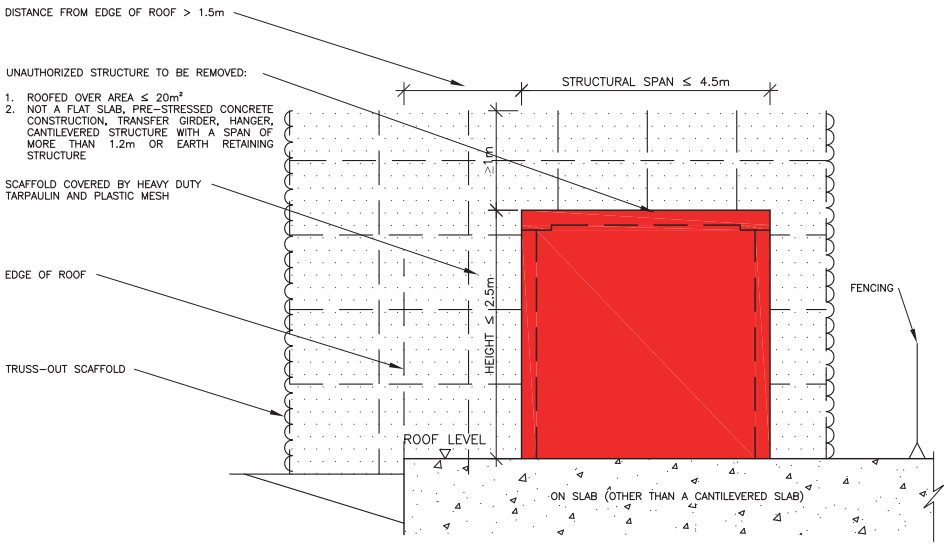

CASE 2: ON SLAB (OTHER THAN A CANTILEVERED SLAB)

GENERAL NOTES :

The works carried out shall comply with the Buildings Ordinance and the provisions of other enactment. (Reference can be made to the examples listed in Sections 3 and 10 of the Guidelines.)

PREPARATION WORKS :

1. Obtain the existing design drawings/ information for reference prior to the commencement of works.
2. Carry out condition survey of the parent structure/ existing condition prior to the commencement of works.
3. Obtain the original design of the approved structure for reference of any required reinstatement works.

SAFETY AND PRECAUTIONARY MEASURES :

1. Fence-off the working area from the public. Diversion arrangement shall be taken if necessary.
2. Bamboo scaffolds details shall refer to the following figures as shown on drawing no. GN-1.
   - Figure 2 Truss-out bamboo scaffold
   - Figure 4 Working platform on a double-row bamboo scaffold
3. No accumulation of demolished parts should be stored on roof.
4. Reference for removal of unauthorized structures shall be made to "Guidelines for the Removal of Typical Unauthorized Building Works and General Maintenance of External Walls" published by the Buildings Department.

WORKING PROCEDURES :

1. Remove all loose features inside the unauthorized building structures prior to the demolition of walls.
2. Demolish the unauthorized building structure from top to bottom. All structures shall be cut to a manageable size (i.e 300mm x 300mm).
3. Make good and reinstate the affected areas (including water proofing layer) of the building.
4. Dismantle the bamboo scaffold and clean the site.

MINOR WORKS ITEM 3.32	REMOVAL OF UNAUTHORIZED SINGLE STOREY STRUCTURE LOCATED ON-GRADE OR ON A SLAB (OTHER THAN A CANTILEVERED SLAB)

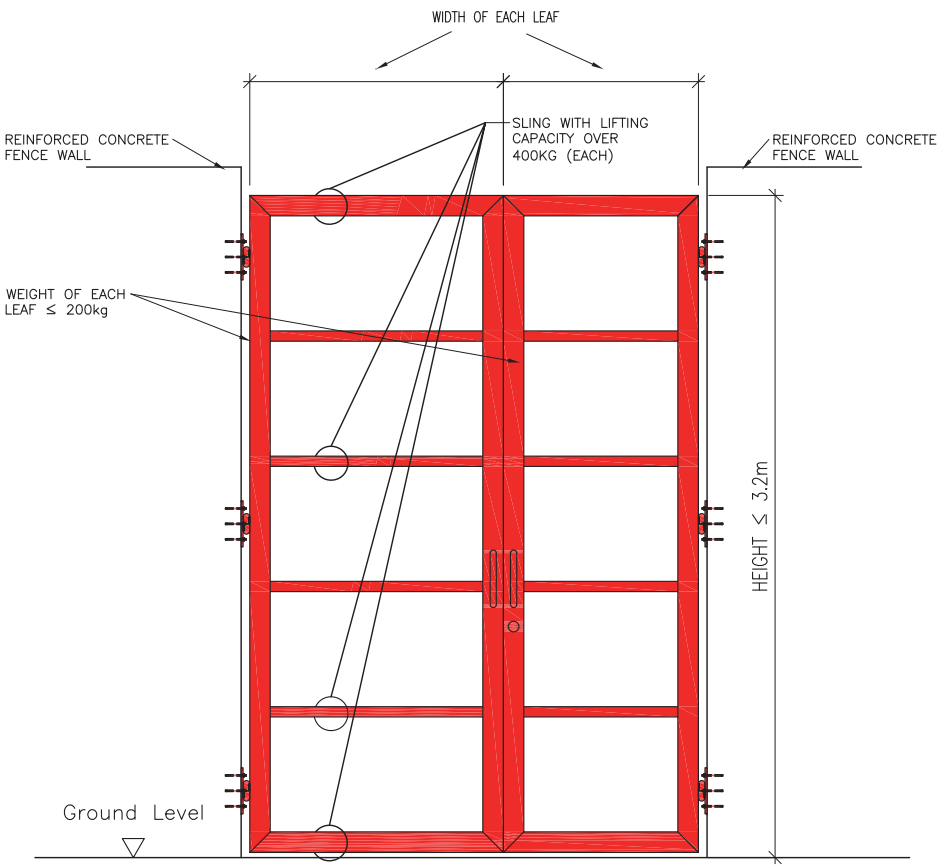

GENERAL NOTES :

1. The works carried out shall comply with the Buildings Ordinance and the provisions of other enactment. (Reference can be made to the examples listed in Sections 3 and 10 of the Guidelines.)

PREPARATION WORKS :

1. Obtain the existing design drawings/ information of the metal gate for reference.
2. Carry out condition survey of the parent structure/ existing condition prior to the commencement of works.
3. Obtain the original design of the approved structure for reference of any required reinstatement works.
4. Disconnect the electric locking device (if any) prior to the commencement of work.

SAFETY AND PRECAUTIONARY MEASURES :

1. Fence–off the working area from the public. Diversion arrangement shall be taken if necessary.
2. The use of lifting device shall be in accordance with relevant Code of Practice/ Guidance Notes issued by the Labour Department.

WORKING PROCEDURES :

1. Use of proper lifting device with slings to secure the gate.
2. Cut off the hinges connected to the metal gate.
3. Lower the metal gate onto floor horizontally.
4. Cut the metal gate into manageably small size and remove off site for construction waste disposal.
5. Make good and reinstate the affected area.

REMARKS :

This case excludes item 8 of the Designated Exempted Works.

MINOR WORKS ITEM 3.33	REMOVAL OF METAL GATE AT A FENCE WALL OR AT AN ENTRANCE TO A BUILDING

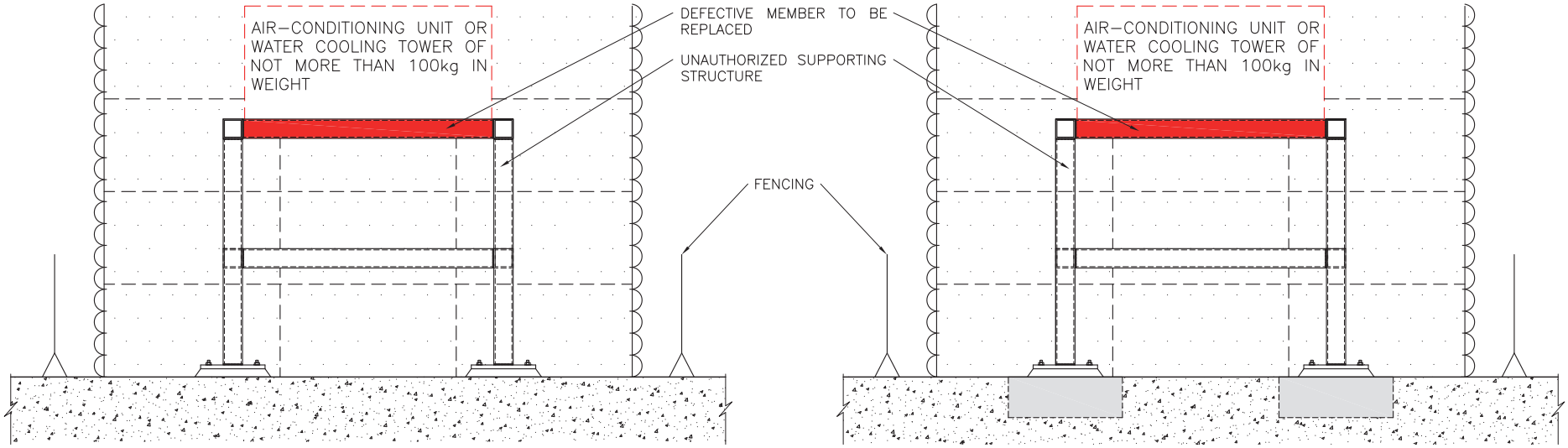

ON ROOF OR SLAB (OTHER THAN A CANTILEVERED SLAB)

ON–GRADE

GENERAL NOTES :

The works carried out shall comply with the Buildings Ordinance and the provisions of other enactment. (Reference can be made to the examples listed in Sections 3 and 10 of the Guidelines.)

PREPARATION WORKS :

1. Obtain the existing design drawings/ information for reference prior to the commencement of works.
2. Carry out condition survey of the parent structure/ existing condition prior to the commencement of works.

SAFETY AND PRECAUTIONARY MEASURES :

1. Fence–off the working area from the public. Diversion arrangement shall be taken if necessary.
2. Bamboo scaffolds details shall refer to the following figure as shown on drawing no. GN–1.
   - Figure 4 Working platform on a bamboo scaffold

WORKING PROCEDURES :

1. Temporary remove existing air–conditioning unit, water tower or any associated air ducts if necessary. (Ensure all water pipes and electrical cable or wires were disconnected prior to any removal works.)
2. Remove the defective members and replace with new members having the same size as the existing one.
3. Make good and reinstate the affected areas of the parent building.
4. Remove the bamboo scaffold and clean the site.

REMARKS :

The works include the connection of flexible condensation pipe from the air–conditioning unit to an existing drain pipe. In case the building is not provided with a disposal system for drainage of the condensation, the building management/ IO/ other owners (where appropriate) should be informed for the provision of a proper disposal system.

MINOR WORKS ITEM 3.34	STRENGTHENING OF UNAUTHORIZED SUPPORTING STRUCTURE FOR AN AIR-CONDITIONING UNIT, WATER COOLING TOWER OR ASSOCIATED AIR DUCTS LOCATED ON-GRADE OR ON A SLAB (OTHER THAN A CANTILEVERED SLAB)

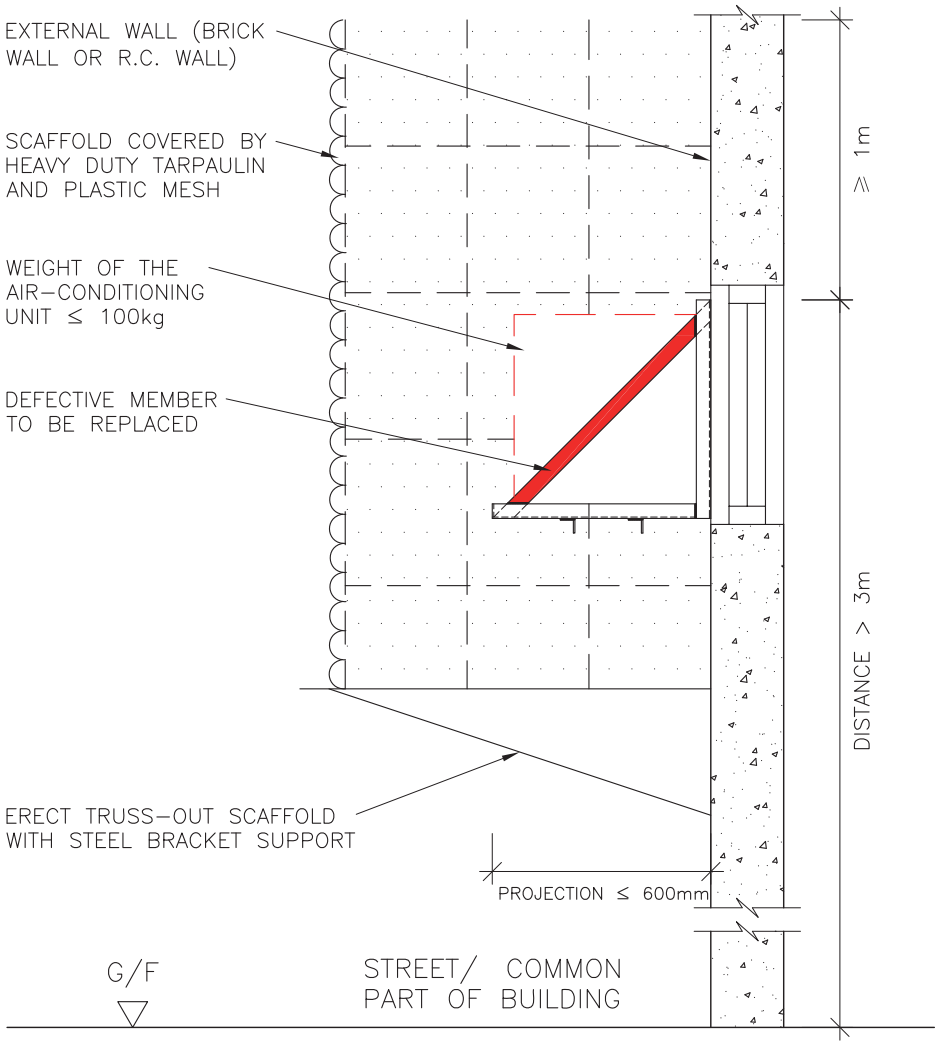

GENERAL NOTES :

The works carried out shall comply with the Buildings Ordinance and the provisions of other enactment. (Reference can be made to the examples listed in Sections 3 and 10 of the Guidelines.)

PREPARATION WORKS :

1. Obtain the existing design drawings/ information of the signboard for reference.
2. Carry out condition survey of the parent structure/ existing condition prior to the commencement of works.
3. Obtain the original design of the approved structure for reference of any required reinstatement works.

SAFETY AND PRECAUTIONARY MEASURES :

1. Fence–off the working area from the public. Diversion arrangement shall be taken if necessary.
2. Bamboo scaffolds details shall refer to the following figure as shown on drawing no. GN–1.
   - Figure 2 Truss–out bamboo scaffold
   - Figure 4 Working platform on a bamboo scaffold

WORKING PROCEDURE :

1. Remove the air–conditioning unit sitting on the supporting frame.
2. Remove the detective member and replace with new member having the same size as the removed member.
3. Re–connect the flexible condensation pipe from the air–conditioning unit to the existing drain pipe of building for drainage of the condensation.
4. Make good and reinstate the affected areas of the parent building.
5. Dismantle the bamboo scaffold and clean the site.

REMARKS :

1. If distance is not more than 3m, the frame does not project over any street or common part of building.
2. In case the building is not provide with a disposal system for drainage of the condensation, the building management/ IO/ other owners (where appropriate) should be informed for the provision of a proper disposal system.

MINOR WORKS ITEM 3.35	STRENGTHENING OF UNAUTHORIZED SUPPORTING STRUCTURE FOR AN AIR-CONDITIONING UNIT OR ASSOCIATED AIR DUCTS PROJECTING FROM THE EXTERNAL WALL OF A BUILDING

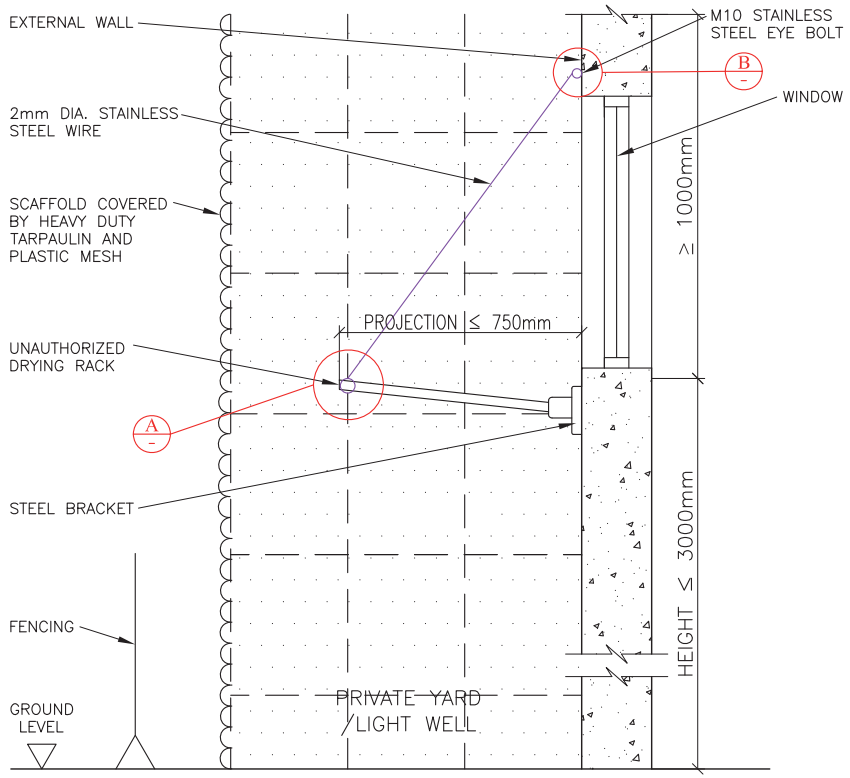

STRENGTHENING OF UNAUTHORIZED DRYING RACK PROJECTING FROM THE EXTERNAL WALL OF A BUILDING

GENERAL NOTES :

The works carried out shall comply with the Buildings Ordinance and the provisions of other enactment. (Reference can be made to the examples listed in Sections 3 and 10 of the Guidelines.)

PREPARATION WORKS :

1. Obtain the existing design drawings/ information for reference.
2. Carry out condition survey of the parent structure/ existing condition prior to the commencement of works.

SAFETY AND PRECAUTIONARY MEASURES :

1. Fence–off the working area from the public. Diversion arrangement shall be taken if necessary.
2. Bamboo scaffolds details shall refer to the following figure as shown on drawing no. GN–1
   - Figure 4 Working platform on a double–row bamboo scaffold

WORKING PROCEDURES :

1. Install the strengthening works (stainless steel eye bolt and wire) as per the drawing.
2. Make good and reinstate the affected areas of the parent building.
3. Dismantle the bamboo scaffold and clean the site.

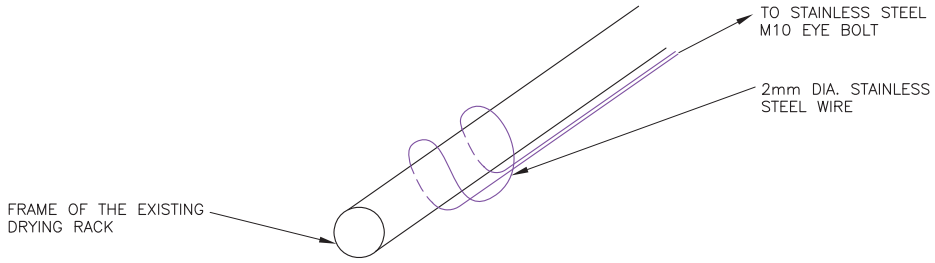

DETAIL A

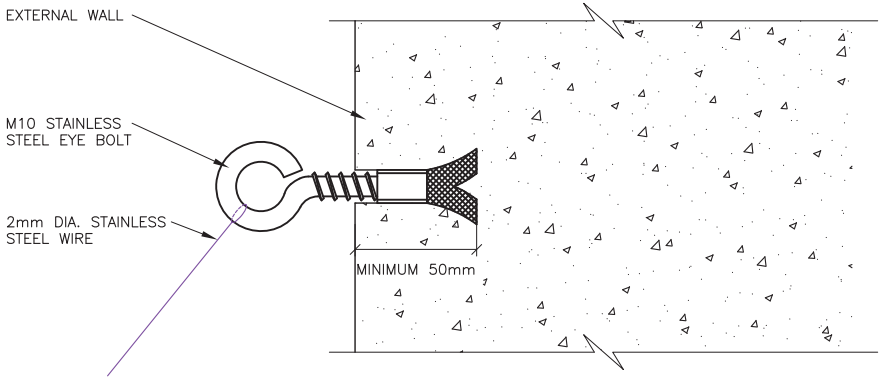

DETAIL B

MINOR WORKS ITEM 3.36	STRENGTHENING OF UNAUTHORIZED DRYING RACK PROJECTING FROM THE EXTERNAL WALL OF A BUILDING

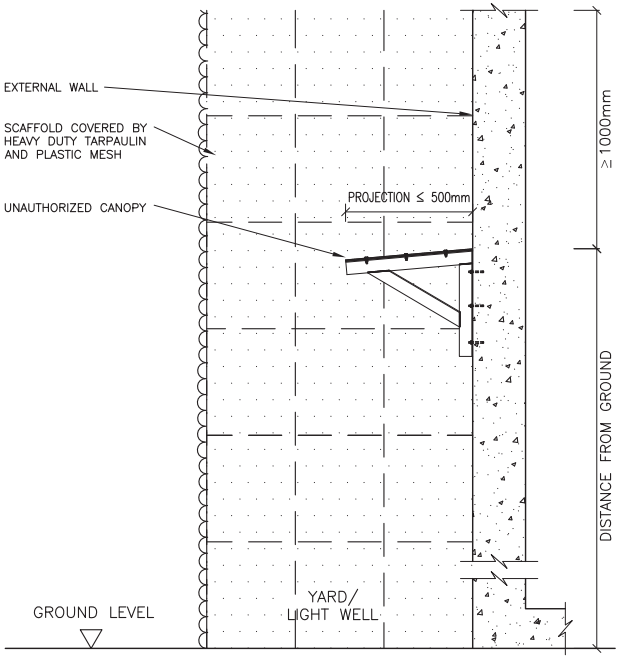

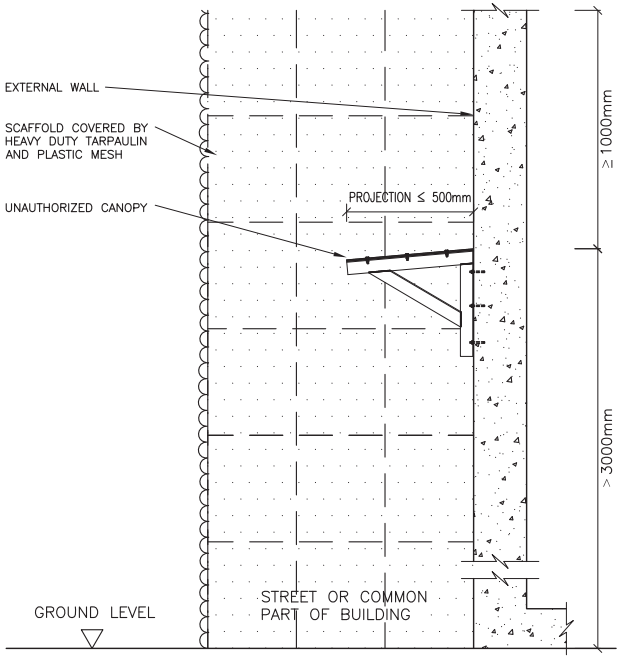

GENERAL NOTES :

The works carried out shall comply with the Buildings Ordinance and the provisions of other enactment. (Reference can be made to the examples listed in Sections 3 and 10 of the Guidelines.)

PREPARATION WORKS :

1. Obtain the existing design drawings/ information for reference prior to the commencement of works
2. Inform the utilities company or sector if the works to be involved.
3. Carry out condition survey of the parent structure/ existing condition prior to commencement of works.

SAFETY AND PRECAUTIONARY MEASURES :

1. Fence–off the working area from the public. Diversion arrangement shall be taken if necessary.
2. Bamboo scaffolds details shall refer to the following figure as shown on drawing no. GN–1.
   - Figure 4 Working platform on a double–row bamboo scaffold

WORKING PROCEDURES :

1. Remove the defective members and replace with a new member with the same size of the existing member.
2. Make good and reinstate the affected areas of the parent building.
3. Dismantle the bamboo scaffold and clean the site.

MINOR WORKS ITEM 3.37	STRENGTHENING OF UNAUTHORIZED CANOPY PROJECTING FROM THE EXTERNAL WALL OF A BUILDING

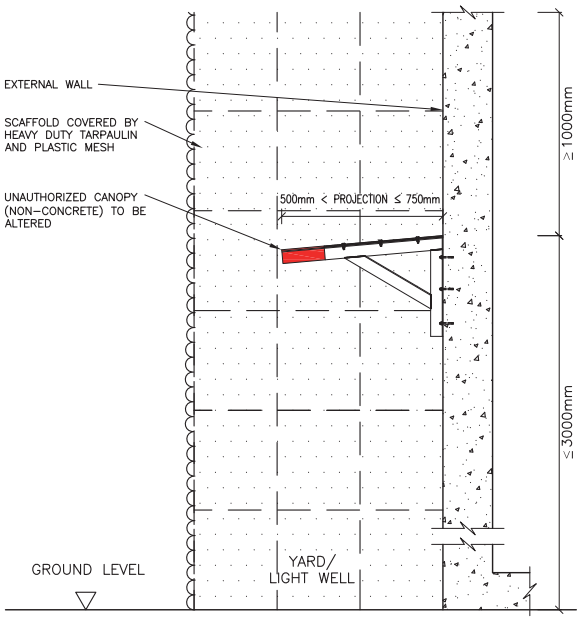

BEFORE ALTERATION

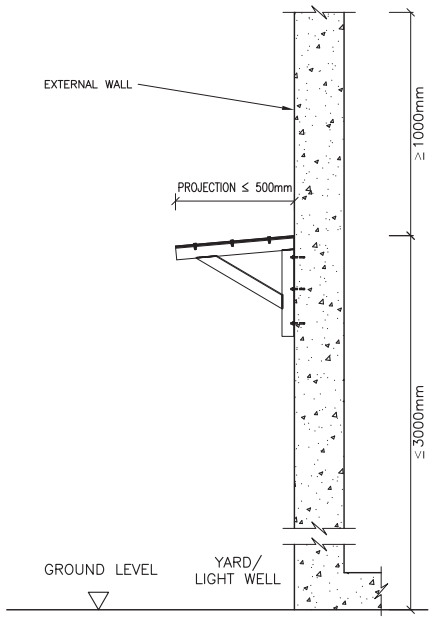

AFTER ALTERATION

CASE 1

GENERAL NOTES :

The works carried out shall comply with the Buildings Ordinance and the provisions of other enactment. (Reference can be made to the examples listed in Sections 3 and 10 of the Guidelines.)

PREPARATION WORKS :

1. Obtain the existing design drawings/ information for reference prior to the commencement of works.
2. Inform the utilities company or sector if the works to be involved.
3. Carry out condition survey of the parent structure/ existing condition prior to the commencement of works.

SAFETY AND PRECAUTIONARY MEASURES :

1. Fence–off the working area from the public. Diversion arrangement shall be taken if necessary.
2. Bamboo scaffolds details shall refer to the following figure as shown on drawing no. GN–1.
   - Figure 4 Working platform on a double–row bamboo scaffold

WORKING PROCEDURES :

1. Use mechanical tools to cut the canopy as per the drawing.
2. Make good and reinstate the affected areas of the parent building.
3. Dismantle the bamboo scaffold and clean the site.

MINOR WORKS ITEM 3.38	ALTERATION OF UNAUTHORIZED CANOPY PROJECTING FROM THE EXTERNAL WALL OF A BUILDING	SHEET 1 OF 2

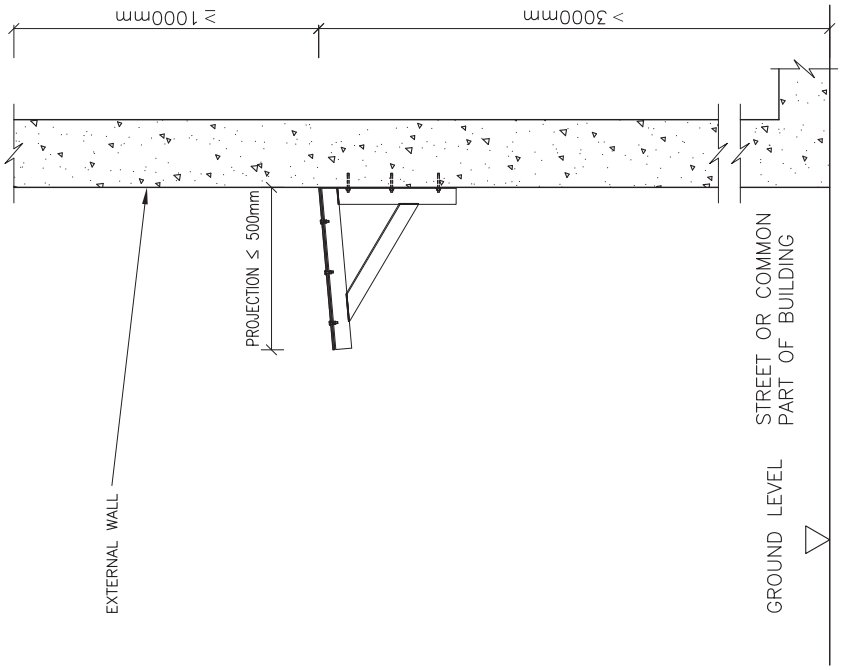

AFTER ALTERATION

CASE 2

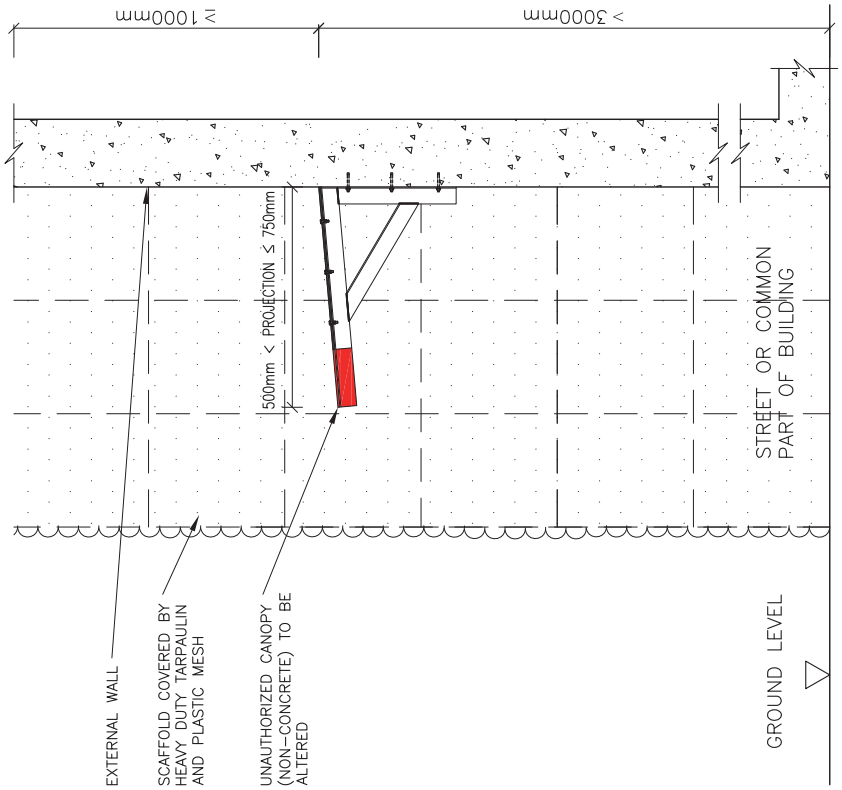

BEFORE ALTERATION

ALTERATION OF UNAUTHORIZED CANOPY PROJECTING FROM THE EXTERNAL WALL OF A BUILDING

SHEET 2 OF 2

MINOR WORKS ITEM 3.38

2010/10

Appendix VIII – Occupational Safety and Health in "Minor Works" - Advice from the Labour Department

1 Introduction

In carrying out "minor works", all too often workers would encounter occupational safety and health (OSH) problems. In the event of a workplace accident during the work, not only workers and their families would suffer harm and pain, there would also be delay and even suspension of works, thus incurring losses. What is more, the additional costs that arise from accidents, such as compensation, medical expenses, insurance premiums, criminal and civil litigation and the like, would bring losses to contractors, employers, property owners, residents, commercial tenants, property management companies and incorporated owners.

2 Legal Liability of a "Duty Holder"

Although the legal interpretation of "duty holder" is rather broad, its basic concept refers to any person, in particular the contractor, employer, occupier, client of outsourced contractors, property management company, incorporated owners and the executor of the Deed of Mutual Covenant, etc., who has any degree of control over the premises or workplace. The liabilities of an "occupier" and an "employer" are clearly defined under the Occupational Safety and Health Ordinance (Cap. 509). Any person who fails to comply with the relevant provisions is liable on conviction to a maximum fine of $200,000 and to imprisonment for 6 months.

3 Key Points in OSH Management

Duty holders in different capacities have to focus on different key points in OSH management. Some key points in OSH management for "minor works" are listed below for reference.

(a) The employer and the contractor responsible for "minor works" should -
- conduct risk assessment of "minor works"; and
- establish and implement a safe system of work, including observance of safety regulations and training and supervision of workers.

(b) The occupier (including Property Management Companies / Incorporated Owners / Property Owners / Residents / Commercial Tenants) should -
- conduct site inspection on the "minor works" or appoint building professionals to carry out such work and determine the areas for which he has a duty in the capacity of an "occupier"; and
- take safety measures to eliminate or reduce the risks related to "minor works" such as fencing off the work site, prohibiting persons not connected with the works from entering the site, etc.

(c) The client of outsourced contractors involved in the works should -
- be thoroughly acquainted with all the risks and safety issues of the outsourced work, determine the scope of responsibilities, seek professional and legal advice and take out liability insurance, etc.;
- consider not only the tender price but also the company's past safety record and adequacy of safety management system listed in the project plan when awarding a "minor works" contract;
- regulate, through contractual terms, the planning and implementation of appropriate

safety measures by the contractor, and manage and control the contractor and his sub-contractors; and

- seek assistance from relevant government departments if a serious safety and health problem relating to "minor works" is likely to occur.

(d) The property management company and the executor of the Deed of Mutual Covenant should -

- disseminate the OSH information on minor works to property owners / residents / commercial tenants;
- find out in advance from the persons concerned and the property owners the nature of works to be carried out in the common areas or a unit of the building, and take actions to supervise and control the works accordingly; and
- request the contractors and workers carrying out the works to submit relevant proof of safety training.

4 Safety Issues to Note

The legislation administered by the Labour Department for governing OSH in "minor works" include the Occupational Safety and Health Ordinance, the Factories and Industrial Undertakings Ordinance and its subsidiary Construction Sites (Safety) Regulations, Factories and Industrial Undertakings (Electricity) Regulations, Factories and Industrial Undertakings (Gas Welding and Flame Cutting) Regulation, Factories and Industrial Undertakings (Dangerous Substances) Regulations, Factories and Industrial Undertakings (Woodworking Machinery) Regulations and Factories and Industrial Undertakings (Cartridge-Operated Fixing Tools) Regulations.

(a) Working at Heights Safety:

- Working at height is common in "minor works", such as renovation works at external walls, installation of split-type air conditioners and laying of wires and pipes. Contractors must take adequate safety precautions to prevent workers from falling from heights or over building edges, scaffolds or working platforms while carrying out works. These works should be carried out on a proper working platform or a scaffold provided with proper working platforms;
- Regarding the guard-rails erected at working platforms, gangways, runs, building edges or stairways, the top guard-rail should be fixed at a height between 900 mm and 1150 mm while the intermediate guard-rail should be fixed at a height between 450 mm and 600 mm. A working platform on a bamboo scaffold should be protected by not less than 2 horizontal bamboo members of the scaffold spaced at intervals between 750 mm to 900 mm;
- The width of a working platform should not be less than 400 mm. The height of toe-boards should not be less than 200 mm;
- Truss-out bamboo scaffolds are commonly used in renovation works at external walls and installation of air conditioners. In the erection of a truss-out scaffold, the design of the scaffold and the relevant working procedures should be drawn up by a competent person. Each bracket should be fitted with three or more anchor bolts. The scaffold should be firmly fixed in a suitable location and provided with safe means of access. When the erection of the scaffold is completed, it should be certified safe by a competent person before the scaffold is taken into use. Workers working on truss-out scaffolds

should wear safety harnesses, and each harness is fitted with fall arrestor and anchored to an independent lifeline; and

- A ladder serves mainly to provide a safe means of access and egress and should not be used as a working platform or as a means of support for working.

(b) Electricity Safety:

- Temporary electric boards and portable electric tools are commonly used in "minor works". If safety precautions for such devices and equipment are not sufficient, serious electrical accidents would happen at anytime;
- Do not connect too many electrical appliances to one socket outlet; one socket outlet should be connected with one electric tool only. The power supply should be installed with an effective residual current circuit-breaker;
- Fasten the cord to the cord grip on the plug. The cord grip should grip the outer insulation sheath of the cord. The live, neutral and earth cores in the cord should be properly connected onto the plug;
- Use non-conductive working platforms to carry out electrical works at height;
- Avoid using electrical equipment in congested and wet workplaces; and
- When working in a switch room or performing electrical installation, isolate the supply to the electrical equipment and circuits to be worked on. The associated circuit breakers or switches should be locked up with warning signs posted outside the switchboard panels to indicate that work is in progress.

(c) Welding Safety:

- Electric arc welding and gas welding are common in the welding and cutting processes. The area nearby the welding process should be free from inflammable substances and no work involving inflammable substances should be carried out at the same time;
- Welding process should be carried out in a well-ventilated place; workers should have undergone relevant safety training and wear suitable personal protective equipment;
- Electric arc welding process should not be carried out on wet floor, in humid condition or outdoor in rainy weather. The welding equipment and the workpiece should be effectively earthed. The bare live metal part of the electric arc welding transformer must be insulated or covered; and
- Before carrying out gas welding work, the equipment and device such as the flashback arrester should be carefully checked; damaged parts should be repaired and replaced. The gas cylinders, when in use, should be kept upright and as far away from the hot work as possible. Fire extinguishers should be provided near the welding process.

(d) Fire Precautions for Inflammable Substances:

- Paint, thinner, turpentine, adhesive and alcohol used for "minor works" are inflammable substances. If the substances are not properly handled, fire and explosion may occur;
- Containers holding inflammable substances should be properly labelled to remind workers of the relevant hazards and safety precautions; and
- When inflammable substances are in use, good ventilation should be provided and smoking prohibited. Naked flame and hot work such as welding and asphalt-mixing should not be conducted in the vicinity.

(e) Confined Spaces Safety:

- The cleaning / maintenance of manholes, sewer drains, water tanks and the like are typical examples of working in confined spaces;
- Dangers commonly found in confined spaces are oxygen deficiency and the presence of methane and toxic gases such as hydrogen sulphide leading to suffocation, fire and

explosion. However, some potential hazards may be overlooked, such as the sudden in-rush of liquids / sewage, or caving in of sand and gravel; and

- Before conducting work in a confined space, the competent person(s) shall conduct a risk assessment on the work to be performed in confined space, and ensure that effective safety measures have already been taken to eliminate the risks, including signing and issuing permit-to-work, conducting tests on quality of air and effectiveness of the ventilation, and using breathing apparatus. Only certified workers shall be allowed to enter confined spaces or work inside.

5 Conclusion

Duty holders must clearly define their roles and responsibilities in "minor works" and provide a safe and healthy working environment for the works through proper arrangements and sound management.

For more OSH information, please refer to the safety publications "Code of Practice for Bamboo Scaffolding Safety", "A Guide to the Factories and Undertakings (Electricity) Regulations", "Code of Practice : Safety and Health at Work for Gas Welding and Flame Cutting", "Occupational Safety and Health Management in Renovation and Maintenance Works for the Property Management Industry", "Guidance Notes to Renovation Safety", "Safety Precautions in Use of Truss-out Scaffolds" (Chinese version only) and "Safety Hints on Renovation Work". These publications can be obtained free of charge from the district offices of the Occupational Safety and Health Branch (OSHB) of the Labour Department (LD) or downloaded from LD's homepage (http://www.labour.gov.hk/eng/public/content2_8.htm) for reference. For further enquiry, please contact the OSHB of LD at 2559 2297.

Appendix IX – Recommended Steps for Contractors who Intended to Carry Out "Minor Works" ("MW")

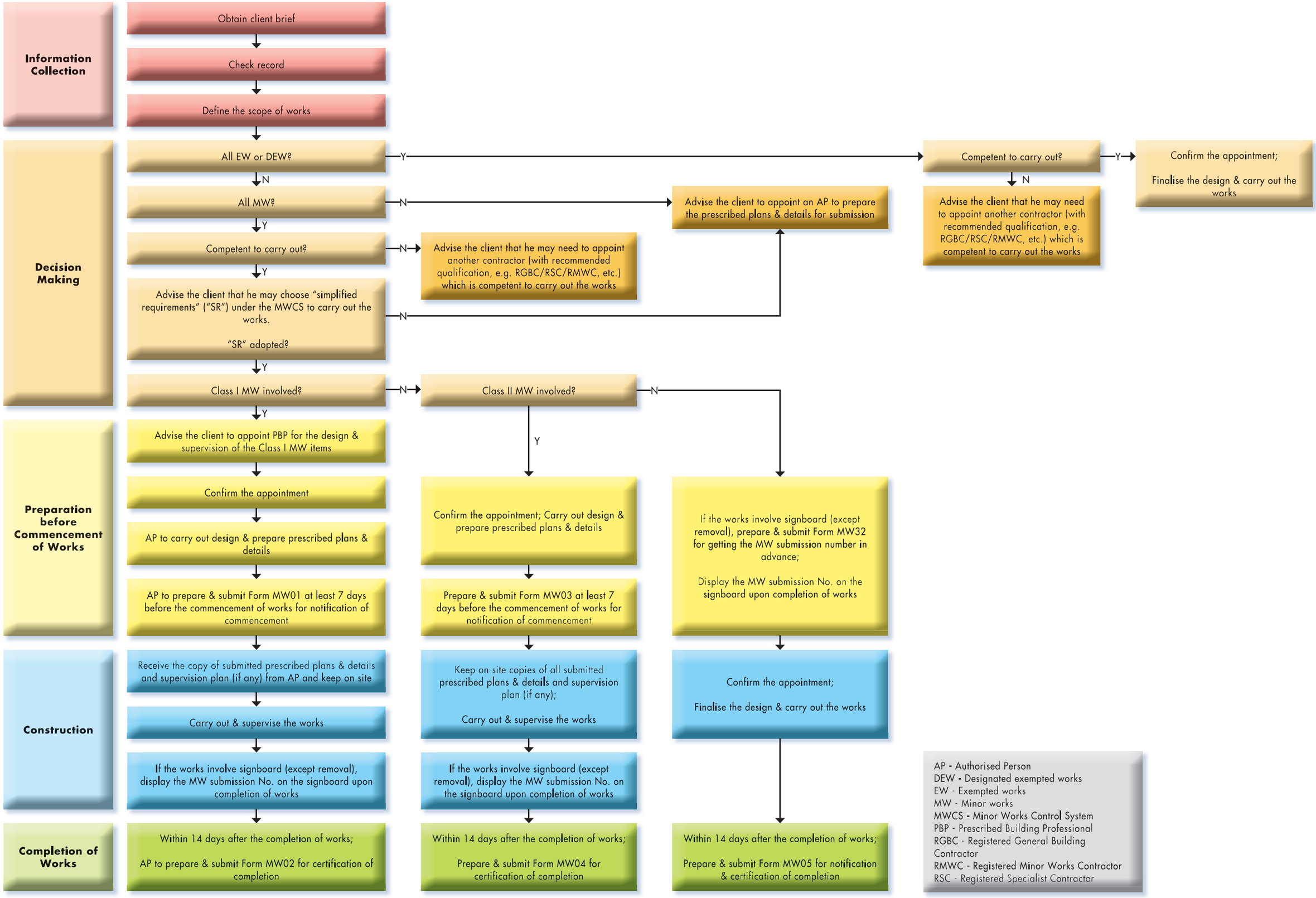

2010/10

Index **page**

A

Architectural projection 34

Audit checks 68, 70, 72, 81

B

Building records 92

Building works associated with service lift, stairlift or lift platform 10

C

Canopy 12, 34

Certificate on completion 64

Chimney 35

Cladding 20

Class I minor works 68

Class II minor works 70

Class III minor works 72

Classes (of minor works) 8

Common part 98

Construction waste 89

D

Dedicated areas or public facilities 98

Designated exempted works [or "DEW"] 75

Drainage 14

Drying rack 16

E

Excavation works associated with "minor works" ... 17

Exempted building works [or "EBW"] 74

External mesh fence 21

External rendering, external wall / roof tiles 20

F

Fence wall 21

G

Glass reinforced polyester [or "GRP"] water tank .. 23

I

Internal staircase 24

M

Metal gate (on fence wall or at the entrance of a building) 26

Minor works [or "MW"] 9

N

New Territories exempted houses 88

Non-loadbearing external reinforced concrete / block wall 28

Notification (commencement/completion) 65

O

Occupational safety and health 239

Opening in floor slab 30

Index **page**

P

Panel fixed by metal dowel 19

Photographs 67

Plans 65, 66

Prescribed building or building works [or "PB/BW"] 79

Prescribed building professional [or "PBP"] 63

Prescribed register contractor [or "PRC"] 63

Prior approval and consent 63

Protective barrier 32

R

Registered Minor Works Contractor (Company) [or "RMWC(Co)"] 65

Registered Minor Works Contractor (Individual) [or "RMWC(Ind)"] 65

S

Scaffolding 93

Signboard 40

Simplified requirements [or "SR"] 63

Specified manner 65

Spread footing associated with "minor works" 17

Structural element 39

Submission number 68, 70, 72, 82

Supervision plan 65

Supporting structure / frame for air-conditioner & water cooling tower 34, 50

Supporting structure for antenna, transceiver or radio base station 53

Supporting structure for photovoltaic system 56

Supporting structure for solar water heating system 58

T

Type A 9

Type B 9

Type C 9

Type D 9

Type E 9

Type F 9

Type G 9

Types (of minor works) 9

U

Unauthorized floor slab 38

Unauthorized structure 36

V

Validation 79

W

Window or window wall 60

屋宇署
BUILDINGS
DEPARTMENT

P70511000E0 $119
ISBN 978-962-02-0390-9